DISA

OPERATIONS AND MAINTENANCE MANUAL

2460"D"
MACHINE

91461-50-3520
SERIAL NUMBER

DECEMBER, 1997
DATE SHIPPED

GOFF

DISA Goff Inc
One Pleasant Grove Road
PO Box 1607
Seminole, Oklahoma 74818-1607
USA

Tel 405-382-6900
Fax 405-382-7013
disagoff@disagoff.com
www.disagoff.com

A. P. MOLLER - MAERSK GROUP

DISA GOFF, INC.
2460 SPINNER HANGER HEAVY DUTY
OPERATION AND MAINTENANCE MANUAL

This manual has been prepared for those responsible for the operation and maintenance of this machine, and for ordering replacement parts. The Goff 2460 Heavy Duty Spinner Hanger has been designed to give years of efficient and trouble free performance with the proper maintenance. A careful study of the information given will help assure that this equipment is operated in the most efficient manner and maintained properly.

877 265 2925

TABLE OF CONTENTS
2460 HEAVY DUTY SPINNER HANGER

SECTION 1 - GENERAL INFORMATION

GENERAL DESCRIPTION

The Goff 2460 heavy duty spinner hanger cabinet contains a structurally reinforced dual blast chamber fabricated from 3" steel plate. The chamber is revolved at a speed of 3 rpm by an electric motor and gear reducer activating a low speed-high torque "HTD" type drive assembly. Adjustable stops on the chamber top working in conjunction with automatic electrical switching provides variable indexing. Number of stops vary for different customer applications. One hook spindle is provided for each chamber. Each spindle is capable of supporting a load of 1500 pounds and continually rotates at a speed of 15 rpm during the blast operating cycle of each chamber. Other fixtures are available to accommodate various blasting needs.

At each indexing stop, abrasive is fed into two direct drive blast wheels. The blast wheels throw a controlled pattern of abrasive at the rotating parts at a high velocity.

The used abrasive falls through specially designed drain holes in the bottom of the chamber and into the primary abrasive screen below. The abrasive is moved by screw conveyor from the cabinet to the elevator where it is picked up and transported to the abrasive separator by cast metal buckets attached to heavy duty belting.

The separator utilizes a rotary screen and air wash separation system to remove contaminants from the recycling abrasive. The clean abrasive is then deposited into the abrasive storage hopper. The hopper is located on top of the cabinet and has the capacity to store a sufficient quantity of usable abrasive to maintain an even flow to the blast wheels.

The dust and contaminants are drawn out of the separator and into the dust collector system for disposal. The 2460 heavy duty spinner hanger utilizes an optional dust collector.

INSTALLATION PROCEDURES

The 2460 heavy duty spinner hanger will be shipped to the customer in two sections. Section I: elevator section and separator/storage hopper section, section II: cabinet/chamber section. Trained Goff personnel or a Goff representative will be made available to instruct customer personnel in the proper operating procedures and maintenance requirements. Installation should be complete including proper air and electrical hook-up, and ready for operation when the representative arrives. Customer provides materials and personnel required for installation. The following is the procedure check list that should be followed during installation.

1. Cabinet and chamber section should be leveled and anchored in place.
2. Section I should be positioned with the separator/hopper section over the blast cabinet and the elevator top section over the elevator leg (located on the right side of the blast unit). Level and bolt securely in place.
3. The elevator belt should now be installed. To gain access to the elevator casing, remove the lid on the elevator top section. Loosen all thread take-ups and lower elevator belt through the top lid. Remove the access cover on the elevator bottom section and adjust the belt splice.
4. Adjust the elevator belt to proper tension by adjusting the all-thread take-ups. The unloaded belt should run generally in the center of the elevator casing with minimum movement from side to side. Elevator buckets should not strike the sides of the casing. It should not be possible to manually slide the elevator belt back and forth across the face of the pulley when the elevator is stopped. However, the tension on the belt should not be so great that there is a danger of tearing out the splice.
5. Connect the drive chains on the conveyor shafts and tighten the set screws on the shaft bearings. Check the tension on all v-belts.
6. The dust collection system is an optional feature. The dust collector should be securely anchored in place. Connect the ducting from the cabinet to the dust collector (Note: Customer provides all ducting materials.)
7. The major portion of the installation is completed. Final electrical and air connections can now be completed. Hoses from the storage hopper to the blast wheels can be attached.
8. After machine installation, inspect all hoppers, conveyors, buckets, screens and spouts. Remove any bolts, nuts, tags or other foreign objects that might have been dropped or left in

the system. Inspection should be made while the power is off and before the machine is put into production.

9. Jog (momentarily start and stop) the blast wheel motors to verify proper rotation and operation.

10. Abrasive can now be added through the rear blast door. Start the elevator system and pour abrasive gradually through the access screen in amounts of approximately 50 pounds. Abrasive will cycle through the elevator system and deposit in the abrasive storage hopper. Continue this procedure until approximately 2000 pounds of abrasive is deposited into the storage hopper. Following initial operation, it may be necessary to add more abrasive to the system. The storage hopper should always be full. Abrasive separator adjustments can be made while initial abrasive is recycling to the hopper.

11. Test the automatic indexing for proper operation. The chamber should always rotate in a clockwise direction.

12. Before loading parts test to check proper operation of the blast wheels.

13. Start abrasive flow to the blast wheels.

14. Set the blast pattern. (Refer to Adjusting and Checking the Blast Pattern in Section 2.)

15. The 2460 heavy duty spinner hanger has been properly adjusted and tested prior to shipping. However all chains, belts and oil levels should be inspected prior to initial operation.

16. Your blast cleaning system is ready for full production cleaning. Please read this operation and maintenance manual completely before attempting to operate or repair this equipment.

DISA GOFF, INC.
2460 SPINNER HANGER HEAVY DUTY
OPERATION AND MAINTENANCE MANUAL

This manual has been prepared for those responsible for the operation and maintenance of this machine, and for ordering replacement parts. The Goff 2460 Heavy Duty Spinner Hanger has been designed to give years of efficient and trouble free performance with the proper maintenance. A careful study of the information given will help assure that this equipment is operated in the most efficient manner and maintained properly.

TABLE OF CONTENTS
2460 HEAVY DUTY SPINNER HANGER

SECTION 1 - GENERAL INFORMATION

GENERAL DESCRIPTION

The Goff 2460 heavy duty spinner hanger cabinet contains a structurally reinforced dual blast chamber. The chamber is revolved at a speed of 3 rpm by an electric motor and gear reducer activating a low speed-high torque "HTD" type drive assembly. Adjustable stops on the chamber top work in conjunction with automatic electrical switching provides variable indexing. The number of stops varies for different customer applications. One hook spindle is provided for each chamber. Each spindle is capable of supporting a load of 1500 pounds and continually rotates at a speed of 15 rpm during the blast operating cycle of each chamber. Other fixtures are available to accommodate various blasting needs.

At each indexing stop, abrasive is fed into two direct drive blast wheels. The blast wheels throw a controlled pattern of abrasive at the rotating parts at a high velocity.

The used abrasive falls through specially designed drain holes in the bottom of the chamber and into the primary abrasive screen below. The abrasive is moved by screw conveyor from the cabinet to the elevator where it is picked up and transported to the abrasive separator by cast metal buckets attached to heavy duty belting.

The separator utilizes a rotary screen and air wash separation system to remove contaminants from the recycling abrasive. The clean abrasive is then deposited into the abrasive storage hopper. The hopper is located on top of the cabinet and has the capacity to store a sufficient quantity of usable abrasive to maintain an even flow to the blast wheels.

The dust and contaminants are drawn out of the separator and into the dust collector system for disposal. The 2460 heavy duty spinner hanger utilizes an optional dust collector.

INSTALLATION PROCEDURES

The 2460 heavy duty spinner hanger will be shipped to the customer in two sections. Section I: elevator section and separator/storage hopper section, section II: cabinet/chamber section. Trained Goff personnel or a Goff representative will be made available to instruct customer personnel in the proper operating procedures and maintenance requirements. Installation should be complete including proper air and electrical hookup, and ready for operation when the representative arrives. Customer provides materials and personnel required for installation. The following is the procedure check list that should be followed during installation.

1. Cabinet and chamber section should be leveled and anchored in place.
2. Section I should be positioned with the separator/hopper section over the blast cabinet and the elevator top section over the elevator leg (located on the right side of the blast unit). Level and bolt securely in place.
3. The elevator belt should now be installed. To gain access to the elevator casing, remove the lid on the elevator top section. Loosen all thread take-ups and lower elevator belt through the top lid. Remove the access cover on the elevator bottom section and adjust the belt splice.
4. Adjust the elevator belt to proper tension by adjusting the all-thread take-ups. The unloaded belt should run generally in the center of the elevator casing with minimum movement from side to side. Elevator buckets should not strike the sides of the casing. It should not be possible to manually slide the elevator belt back and forth across the face of the pulley when the elevator is stopped. However, the tension on the belt should not be so great that there is a danger of tearing out the splice.
5. Connect the drive chains on the conveyor shafts and tighten the set screws on the shaft bearings. Check the tension on all v-belts.
6. The dust collection system is an optional feature. The dust collector should be securely anchored in place. Connect the ducting from the cabinet to the dust collector (Note: Customer provides all ducting materials.)
7. The major portion of the installation is completed. Final electrical and air connections can now be completed. Hoses from the storage hopper to the blast wheels can be attached.
8. After machine installation, inspect all hoppers, conveyors, buckets, screens and spouts. Remove any bolts, nuts, tags or other foreign objects that might have been dropped or left in

the system. Inspection should be made while the power is off and before the machine is put into production.

9. Jog (momentarily start and stop) the blast wheel motors to verify proper rotation and operation.

10. Abrasive can now be added through the rear blast door. Start the elevator system and pour abrasive gradually through the access screen in amounts of approximately 50 pounds. Abrasive will cycle through the elevator system and deposit in the abrasive storage hopper. Continue this procedure until approximately 2000 pounds of abrasive is deposited into the storage hopper. Following initial operation, it may be necessary to add more abrasive to the system. The storage hopper should always be full. Abrasive separator adjustments can be made while initial abrasive is recycling to the hopper.

11. Test the automatic indexing for proper operation. The chamber should always rotate in a clockwise direction.

12. Before loading parts test to check proper operation of the blast wheels.

13. Start abrasive flow to the blast wheels.

14. Set the blast pattern. (Refer to Adjusting and Checking the Blast Pattern in Section 2.)

15. The 2460 heavy duty spinner hanger has been properly adjusted and tested prior to shipping. However all chains, belts and oil levels should be inspected prior to initial operation.

16. Your blast cleaning system is ready for full production cleaning. Please read this operation and maintenance manual completely before attempting to operate or repair this equipment.

SECTION 2 - BLAST WHEEL ASSEMBLY

GENERAL DESCRIPTION

The blast wheel assembly is the most vital part of any airless blast cleaning system, thus the operating efficiency depends entirely upon the proper inspection, assembly, and adjustment of the blast wheel components. Due to the abrasive nature of the material handled by the blast wheel, there will be constant wear on internal parts, making periodic inspection and replacement essential.

It is important to keep in mind that the very nature of this device requires that some of the parts be extremely hard and wear resistant. This hardness cannot be attained without making the wear parts brittle. When handling these parts (blades, impeller, control cage and liners) they should be considered as cast glass. A sharp blow with a drift or pry bar can result in chips flying off with explosive force. Flying chips may also result from accidentally or carelessly knocking hardened parts together. When working with blast wheel components, always wear gloves and safety glasses.

The efficiency of this equipment, the blast cycle time and the production requirements will all depend largely on the conditions under which the blast wheel is operated and maintained. Compliance with the instructions and suggestions given in this manual should result in a highly efficient and productive blast cleaning system.

The blast wheel assembly functions as follows: The abrasive valve feeds a controlled amount of abrasive (steel shot or steel grit) through the feed spout to the impeller. The impeller, rotating at a high speed, produces a centrifugal force that moves the abrasive through the control cage opening into the path of the rotating blades. The blades throw a controlled pattern of abrasive at the work surface. The blast wheel, by throwing a large quantity of abrasive per minute, at a high velocity, provides an economical and thorough method of cleaning.

CW BLAST WHEEL ASSEMBLY
(0108900-014)

Item Number	Part Number	Qty	Description
1	0000268	1	Cage retainer
2	0000293	1	Hub seal
3	0002046	1	Blast housing cover liner
4	0000291	1	Hub
5	5000294	7	Shear ring
6	5000302	1	Feed spout seal
7	5000138	1	Control cage
8	5001936	1	Top liner
9	7003920	7	Blade block screw
10	5001938	1	Rear side liner
11	5001939	1	Front side liner
12	0002428-002	1	Bare wheel
13	5100292	1	Hub seal
14	5100116	1	Blade block set
15	5000136	1	Impeller
16	5100301	1	Cage adapter
17	5000303	1	Feed spout
18	5102064	1	Blade set
19	6000956	1	Bushing, 1-5/8"
20	7002752	2	Hex nut
21	6101159	2	Threaded clevis
22	8100546	1	Motor 10 Hp
23	6000531	1	Roll pin
24	5000137	1	Centering plate
25	0142328	1	Base plate
26	6000962	1	Lock washer-Special 5/8"
27	7004114	1	Socket cap screw
28	0102045	1	Housing
29	0102041	1	Housing lid
30	6001204	1	Bushing adaptor
31	7003910	7	Blade block screw
32	5001937	1	End liner
33	5002308	1	Long end liner
34	5000129	1	End liner extension

REPLACEMENT PARTS LIST IS SUBJECT TO CHANGE WITHOUT NOTICE.

Tune-up kit #0144502 for 12" wheels is available for your shelf stock. This kit contains the following common wear items: blade set, impeller and socket head screw, control cage, and seals. For all other parts please reference the above list.

CCW BLAST WHEEL ASSEMBLY
(0108900-037)

Item Number	Part Number	Qty	Description
1	0000268	1	Cage retainer
2	0000293	1	Hub seal
3	0002046	1	Blast housing cover liner
4	0000291	1	Hub
5	5000294	7	Shear ring
6	5000302	1	Feed spout seal
7	5000138	1	Control cage
8	5001936	1	Top liner
9	7003920	7	Blade block screw
10	5001938	1	Rear side liner
11	5001939	1	Front side liner
12	0002428-002	1	Bare wheel
13	5100292	1	Hub seal
14	5100117	1	Blade block set
15	5000136	1	Impeller
16	5100301	1	Cage adapter
17	5000303	1	Feed spout
18	5102064	1	Blade set
19	6000956	1	Bushing, 1-5/8"
20	7002752	2	Hex nut
21	6101159	2	Threaded clevis
22	8000546	1	Motor 10 Hp
23	6000531	1	Roll pin
24	5000137	1	Centering plate
25	0142328	1	Base plate
26	6000962	1	Lock washer - Special 5/8"
27	7004114	1	Socket cap screw
28	0102045	1	Housing
29	0102041	1	Housing lid
30	6001204	1	Bushing adaptor
31	7003910	7	Blade block screw
32	5001937	1	End liner
33	5002308	1	Long end liner
34	5000129	1	End liner extension

REPLACEMENT PARTS LIST IS SUBJECT TO CHANGE WITHOUT NOTICE.

Tune-up kit #0144502 for 12" wheels is available for your shelf stock. This kit contains the following common wear items: blade set, impeller and socket head screw, control cage, and seals. For all other parts please reference the above list.

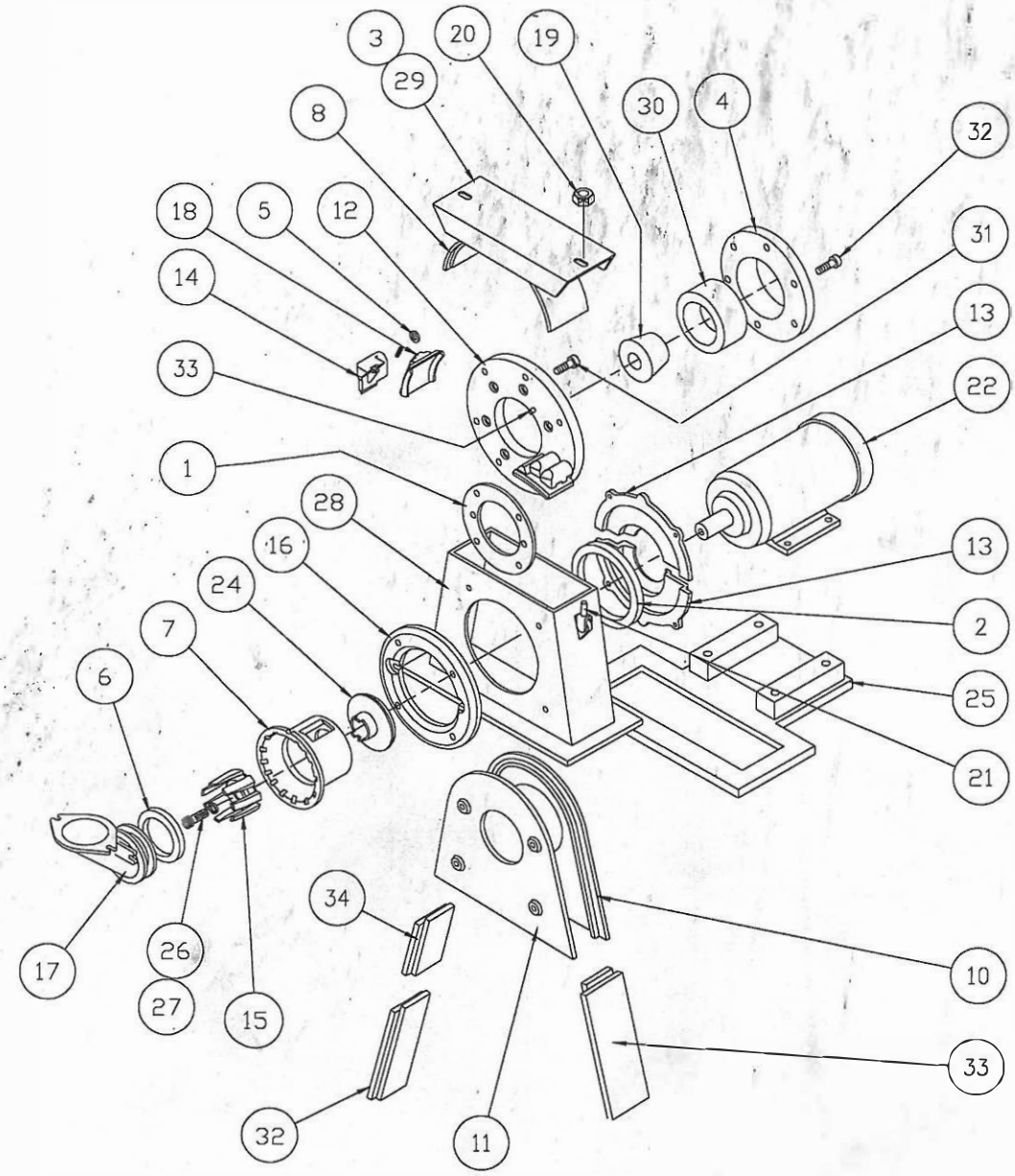

BLAST WHEEL ASSEMBLY – ISOMETIRC VIEW

(Refer to replacement parts list on page 2-2)

M0474B

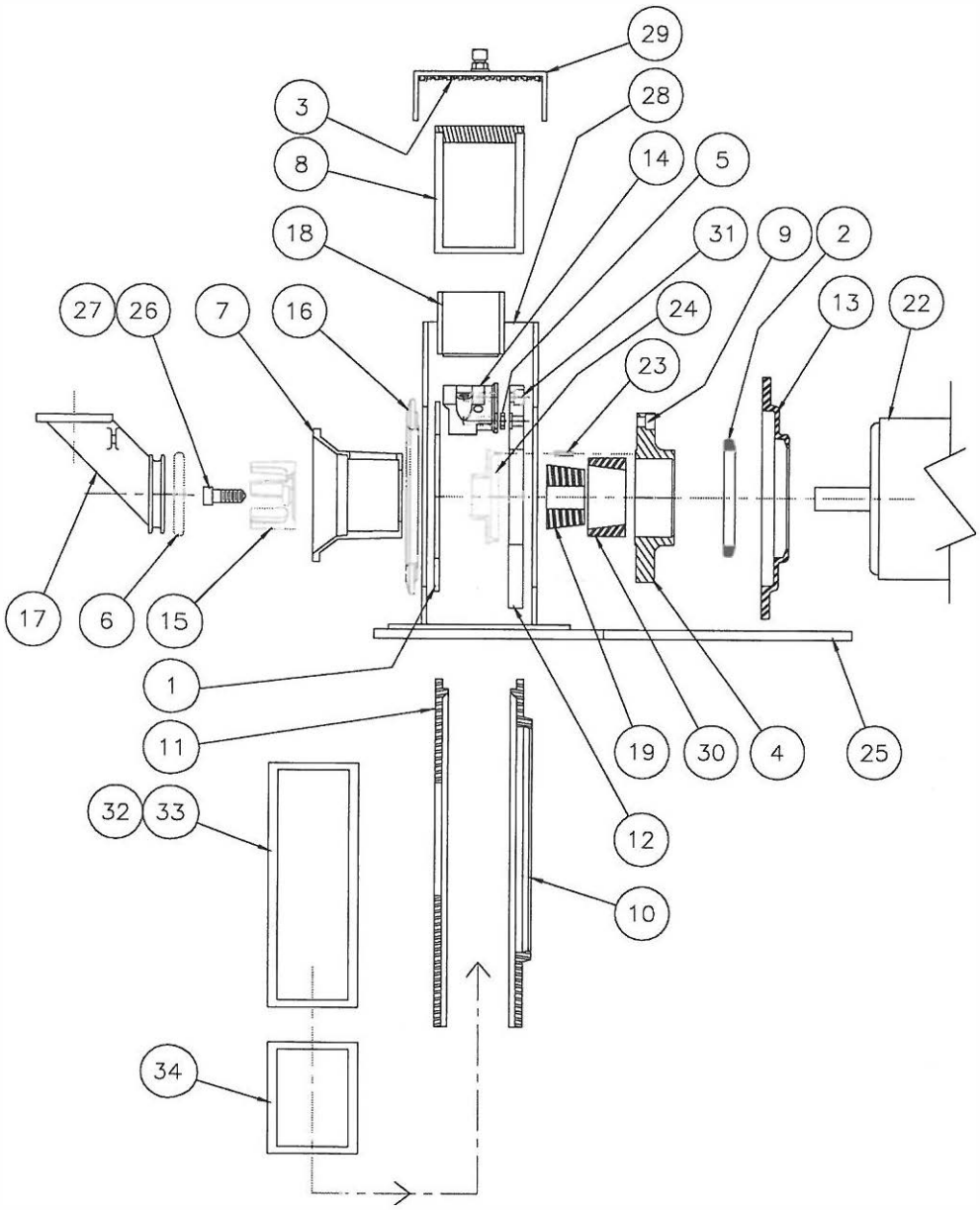

BLAST WHEEL – SIDE VIEW

(Refer to replacement parts list on page 2-2)

M0486A

INSPECTION OF THE WEARING PARTS

1. Open the manually operated disconnect at the control panel and tag switch so that the machine cannot be energized. Lockout and tag-out machine before proceeding with inspection.
2. Remove the blast housing cover by loosening the knobs on each end of the cover, rotate the clevis brackets and lift lid upward.
3. Remove the top liner to give access to the blast wheel assembly.
4. Rotate the blades by hand and inspect them for wear. Vibration of the blast wheel when operating is usually an indication of excessive blade wear or a broken blade. Whenever vibration is excessive, all blades and springs should be removed and replaced. When the blades are deeply grooved or worn to half their original thickness they should be replaced. Never attempt to replace anything less than a full set of blades and springs. The blades are carefully weighed and balanced in matched sets and should never be separated. If the blades will not remain on the blade blocks when rotating by hand, then the blade blocks may be excessively worn and should be replaced.
5. Make a visual inspection of the control cage opening. The sides of the opening are beveled and when the bevel width is reduced to half its original size, the control cage should be replaced.
6. While rotating the blades by hand, it is possible to see the leading edge of the impeller fingers. If the fingers are grooved or worn to half their original size, the impeller should be replaced.
7. The feed spout wears very slowly so the inspection of this part usually involves checking for cracks or other physical abuse.
8. The blast wheel liners should be replaced when they become worn to half their original thickness. If the liners are allowed to wear through, serious damage could occur to the blast housing. The liners can be inspected visually or by feeling the surface of the various liners.

NOTICE: Tune-up kits are available for maintenance shelf stock at your plant. These tune-up kits are common wear items. It is recommended that you inspect your blast wheel daily to determine the extent of wear. This daily inspection can be done without any disassembly with the aid of a flashlight. Shine the flashlight up through the bottom of the blast wheel assembly and visually inspect the blades, blade blocks, impeller and control cage.

BLAST WHEEL HOUSING LINERS

The blast housing liners are identified as follows: top liner, end liners and sideliners. These liners are made of an extremely hard cast alloy. The blast wheel liners are positioned around the blast wheel to protect the blast wheel housing. Since these liners are in the path of abrasive, wear is to be expected. Liners should be inspected often to determine when replacement is necessary. All liners should be inspected on a regular basis. If the liners are allowed to wear through, the housing itself will quickly develop wear holes causing abrasive leakage on and around the machine. **ALWAYS TURN THE POWER OFF PRIOR TO LINER INSPECTION**. Lockout and tag-out before proceeding.

The top liner is located in the uppermost section of the housing and is held in place by the housing cover. The sideliners are located in the front and backsides of the housing. The end liners are located in the right and left ends of the blast wheel housing. The end liners are a slip fit between the sideliners.

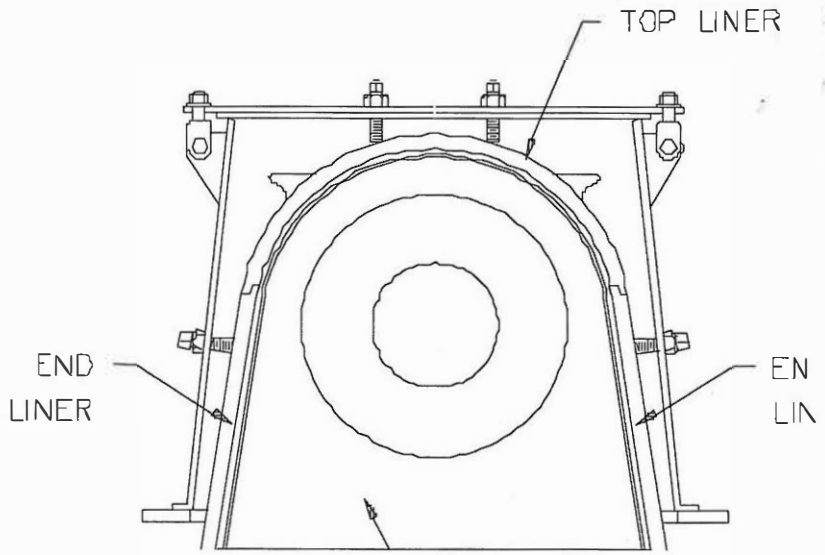

BLADES

The blades used in Goff airless blast wheel have been weighed and matched at the factory to ensure minimum vibration of the blast wheel assembly. The blades should always be replaced in matched sets. Partial replacement will result in excessive vibration.

The blades should be checked on a regular basis for wear and breakage. Although a set of blades may be wearing evenly and may not be causing any abnormal vibrations, they should not be allowed to wear all the way through. Holes in the blades will allow abrasive to enter the area in back of the blades causing wear on internal blast wheel parts. This will cause the blast wheel to be "out of balance" as well as disrupt the controlled blast pattern. If a new set of blades will not remain on the blade blocks when rotated by hand, the blade blocks are worn and will require replacement.

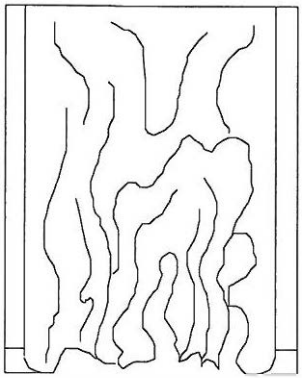

OLD BLADE

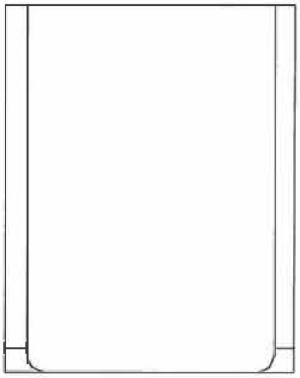

NEW BLADE

M0036

CHECKING THE ROTATING ASSEMBLY FOR BALANCE AND NOISE

The blast wheel assembly should always run smooth with very little vibration or noise. Excessive vibration of the blast wheel or unusual noise during operation should be investigated immediately. Vibration is an indication of an "out-of-balance" wheel. An "out of balance" blast wheel is the result of worn or broken blades, blade blocks, impeller, and bare wheel or damaged internal parts. When investigating an "out-of-balance" wheel, the blades should be inspected first, followed by impeller, blade blocks and the bare wheel.

Damage to the internal rotating parts of the blast wheel usually occurs when blades are allowed to wear through or are broken and abrasive enters the area behind the blade. To inspect and replace the blades and other parts of the rotating assembly, it will be necessary to partially or completely disassemble the blast wheel depending on the cause and remedy of the vibration or noise.

Motor failure or improper motor rotation could also cause excessive vibration or noise. A qualified electrical serviceperson should do all motor repair or replacement.

BLAST WHEEL MAINTENANCE

WHEEL DISASSEMBLY

1. Check to make sure the disconnect switch is open and tagged or locked open. Lockout and tag-out machine before proceeding.
2. Remove the blast housing cover by loosening the nuts on each end of the cover, rotate the clevis brackets and lift the lid upward.
3. Lift the top liner out.
4. Remove the feed spout by removing the two 3/8" hex head nuts holding it in place.
5. Remove the two 3/8-16 NC x 1" hex head bolts from the recessed slotted holes in the cage adapter.
6. Unscrew and remove the socket head cap screw inside the impeller. A special lock washer locks the screw in place. The control cage and centering plate can now be removed.
7. The blast wheel blades can now be removed. If the blades are not badly worn, they can be used again. To aid in the re-installation process, the blades should be numbered 1 thru 7 in a clockwise direction before removal. To remove a blade, push the blade toward the center of wheel and rotate bottom of blade out until it is free from the block, then lift it out. Remove all the blades in this manner.
8. Inspect all the parts, which have been removed to determine whether they are worn or damaged to the extent that replacement is necessary.
9. Replace the top liner and housing cover. Bolt cover in place and run blast wheel assembly (no abrasive).

NOTE: If the assembly runs smoothly and there is no noticeable noise or excessive vibration, no further disassembly will be necessary. The worn parts can be replaced and the blast wheel re-assembled. However if vibration or noise is still present it will be necessary to complete the disassembly and remove the remaining rotating parts.

10. Remove the housing cover and lift up the top liner.
11. Loosen the compression cap screws on the right and left side of the blast housing. The end liners can now be removed through the top or bottom of the blast housing. Tap the liner gently with a rubber or plastic mallet to ease removal.
12. Remove the four hex head bolts holding the hub seal in place. The hub seal is in two pieces and contains a felt seal.

13. Remove the seven socket head cap screws from the outer bolt circle. These socket head screws are accessible through a cutout at the top of the blast wheel housing.
14. Hold one of the blade blocks from inside the housing and remove the socket head screw that fastens it to the bare wheel. These screws are located on the inner bolt circle. Remove each of the remaining blade blocks in the same manner.
15. After all seven blade blocks have been removed; the bare wheel will be free to fall away from the hub. Tilt the bare wheel forward and remove it through the top of the housing.
16. Remove the two allen-head screws in the taper lock bushing. Lightly oil one of the allen-head screws and re-install it in the third hole on the bushing. Be sure the hole is free of any abrasive. This hole is threaded only on the bushing side, the side nearest the motor shaft. Tighten this screw until the hub is released from the taper lock bushing. If the hub does not release, tap on the face of the hub using a bronze drift and tighten the screw again. When the hub is loose on the bushing, slide the taper lock assembly forward into the blast housing and off the end of the motor shaft.
17. Remove the hub and key from the motor shaft.
18. Clean the motor shaft and all blast wheel components. Inspect the keyway in the motor shaft and the key for wear.
19. Inspect front and back sideliners for wear. If liners are worn to one half their original thickness, they should be replaced. Remove the retaining bolts holding the front sideliner and remove. Repeat this step on the backside liner. The sideliners must be removed through the bottom of the blast housing.
20. If the blast wheel motor runs smoothly, the blast wheel can be re-assembled. All badly worn parts should be replaced to assure a smooth running final assembly. If vibration still exists, the motor may need to be repaired or replaced. Be sure a qualified electrician or serviceperson does all motor electrical repairs or replacements.

WHEEL ASSEMBLY

1. Replace the key in the keyway on the motor shaft. The key should fit snugly in the keyway.
2. Place the taper lock bushing in the taper lock hub. Align the taper lock assembly with the two opposite threaded half holes in the bushing.
3. Slide the assembly over the end of the motor shaft with the key properly aligned with the keyway in the bushing. Push the hub and taper lock bushing onto the shaft.
4. Lightly oil the two set screw threads. Start the setscrews in the holes which are diametrically opposite each other. Check the location of the hub and bushing. This dimension is critical and must be maintained around the entire hub diameter. When the hub extends the proper distance from the housing, tighten the setscrews evenly. First snug up one side and then the opposite side until they are as tight as possible. Final tightening should be done with a 6" pipe extension on a 1/4" allen wrench. (Refer to Blast Wheel Assembly - Top View on page 2-4)
5. Slide the bare wheel over the end of the shaft and onto the register of the hub. Fit the shear rings into each counter bore of each threaded hole of the blade block with the beveled side of the blade block facing toward the center of the hub. Align the shear ring with the counter bored hole in the bare wheel and hub together using a 1/2-13 NC x 2" socket head cap screw. Continue this procedure with each blade block until all seven are mounted on the bare wheel. Continue around using the outer bolt circle and seven 1/2-13 NC x 1" socket head cap screws. The holes in the outer bolt circle are accessible through cutouts in the blast wheel housing. When the blade blocks are properly mounted and faced flush with the bare wheel, block the blast wheel against rotation with a wooden block and tighten the fourteen socket head cap screws with a 3/8" allen wrench and extension handle. These allen-head screws should be tightened to 80 ft-lbs of torque.
6. Place the rear sideliner in position. Center the liner around the bare wheel and bolt in place.
7. Place the cage retainer inside the housing centering it with the large center hole of the housing front. Attach the cage adapter to the cage retainer using two 3/8-16 NC x 1" hex head bolts on the outer bolt circle.
8. Install the front sideliner making sure it is in perfect alignment with the rear sideliner. This alignment is essential for the top liner and end liners to seal correctly.

9. The blades should be installed in a clockwise direction. Attach the blades to the blade blocks in such a way as to have the blade face with the wide part of the shoe toward the inside next to the impeller.
10. Install the centering plate over the end of the motor shaft and slide into bore of the bare wheel.
11. Place the control cage inside the cage adapter. The notch in the outside rim of the control cage should be facing 180□ away from the shot pattern.
12. Install the impeller inside the control cage matching up the notches in the impeller with the lugs on the centering plate. Install 5/8-11 NC x 1-1/2" socket head cap screw, and the special lock washer in the threaded motor shaft. Block the blast wheel rotation with a wooden block and tighten the screw to 60 ft-lbs of torque.
13. The control cage can now be adjusted and bolted in place. The control cage is held in place by two 3/8-16 NC x 1" hex head screws with flat and lock washers. The screws and washers should be installed in the two recessed slotted holes in the cage adapter at the 3:00 and 9:00 position. Move the assembly up and down and side to side until the spacing between the impeller and the control cage is equal all around. Rotate the blades by hand to check for cage clearance. Repositioning of the cage adapter and cage retainer to obtain proper cage clearance may be necessary. Tighten the two 3/8" bolts to hold the assembly in place.
14. Rotate the blast wheel assembly by hand and check for noise or binding.
15. Install top liner and replace the blast housing cover.
16. The end liners have sides and ends that interlock. They are located in the right and left ends of the blast wheel housing. The end liners are a slip fit between the sideliners. They should be installed with the offset arranged in such a way as to have the inside overlap extending at the top and placed flush with the top of the side liner. End liners can be positioned from the top or bottom to the housing. The longer end liner should be placed in the bottom of the housing, facing in the direction of the blade rotation. When end liners are in place, tap lightly with a plastic mallet to insure proper fit against the top liner. Tighten the compression cap screws to hold end liners in place.
17. Install the two support studs into cage retainer. Make sure the studs do not extend past the cage retainer into the blast wheel area. Install the two 3/8" heavy hex nuts followed by the two washers.
18. Inspect the feed spout seal and replace if necessary. Slide the slotted ears of the feed spout into place over the two support studs and fix it place using two flat washers, two lock washers and two 3/8" hex head nuts.

19. Rotate the blast wheel assembly by hand and check for noise or binding.

20. Close manually operated disconnect switch. After installation of the abrasive valve the blast wheel will be ready for operation. (Instructions on Abrasive Valve Adjustment are on page 2-17)

21. Proper rotation of the blast wheel motor should always be checked during initial installation; after any change to electrical supply lines, electrical circuits or blast wheel motor. The blast wheel should always rotate so that the abrasive is discharged from the front or face of the blades. Whenever the blast wheel is started for the first time be sure to jog (momentarily start and stop) the blast motor to insure that the direction or rotation is correct and that the positioning of the blades, cage and impeller are correct. Following the jog test, run the wheel "no load" test (no abrasive) checking for noise or vibration. The unit should run quietly with little or no vibration.

22. Always check the blast pattern after installation of a new set of blades. (Refer to information on Blast Pattern Test and Adjustment in this section.)

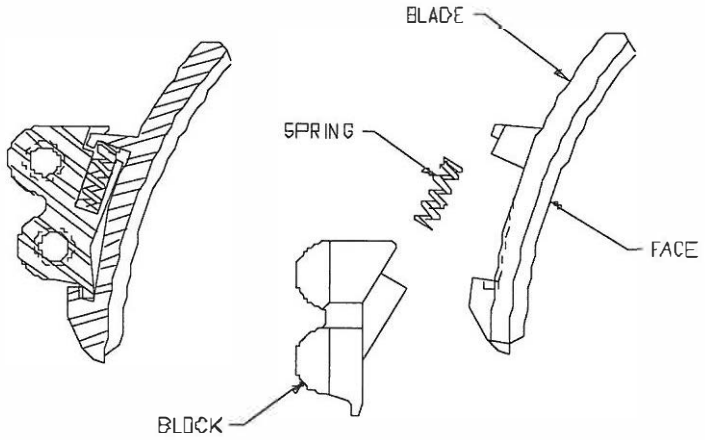

ABRASIVE CONTROL VALVE

The Goff airless blast wheel assembly is equipped with a totally enclosed abrasive control valve. Correct adjustment of the control valve is essential for maximum cleaning efficiency and maximum blast motor life.

The blast wheel motor determines the abrasive flow adjustment. (To determine the full load rating of the motor, check the motor manufacturers nameplate.) To obtain the full blast wheel efficiency from an ammeter, the meter should always show a full load reading during the blast cycle. This can vary with different abrasive.

When the blast wheel motor is started, the ammeter indicator will go to the extreme right side of the dial until the blast wheel has attained maximum speed. The indicator will then drop back to normal "no load" amperage. This "no load" reading can serve to indicate the presence of motor or bearing trouble in future operation. When the blast wheel is running true, the ampere reading should be constant and steady. Any severe fluctuations can be interpreted as an indication of bearing trouble, "drag" in some moving parts of the blast wheel, motor trouble, or electrical supply variances.

While the machine is in actual operation, any fluctuations in the ammeter reading should be investigated. Changes could indicate shortage of abrasive, stalled elevator, clogged screen, or foreign objects in the impeller. The ammeter serves as a prime indicator of proper or improper operation.

As the abrasive valve is opened the amperage load will increase. The valve should be set so that the motor will draw maximum rated amperage or run at 100% efficiency. Always run the blast motor at maximum efficiency (never overload). Monitor and adjust amperage as necessary.

An adjustable air cylinder operates the abrasive control valve. The cylinder has an adjustable bolt mounted in the end of the air cylinder. By adjusting this bolt, in or out, you can increase or decrease amperage. To increase amperage, loosen the jam nut on the bolt adjustment and back the bolt out until desired amperage is obtained. Re-tighten the jam nut. To decrease amperage, the bolt should be tightened.

REPLACEMENT PARTS LIST - ABRASIVE VALVE
(0105763)

Item Number	Part Number	Qty	Description
1	7002832	1	Hex nut UNC 1/4-20
2	5002058-001	1	Butterfly disc
3	5000121	1	Insert
4	5000152	1	Lever
5	0003943	1	Shaft
6	5100103	1	Body
7	6000136	1	Cylinder
8	5100190	1	Cylinder mount bracket
9	6000142	1	Clevis rod
10	6000936	2	Ring retainer
11	6001165	2	Fitting
12	7008878	2	Screw 10-24
13	7000912	1	Hex bolt 1/4-20
14	7003004	2	Flat washer 1/4

REPLACEMENT PARTS LIST IS SUBJECT TO CHANGE WITHOUT NOTICE.

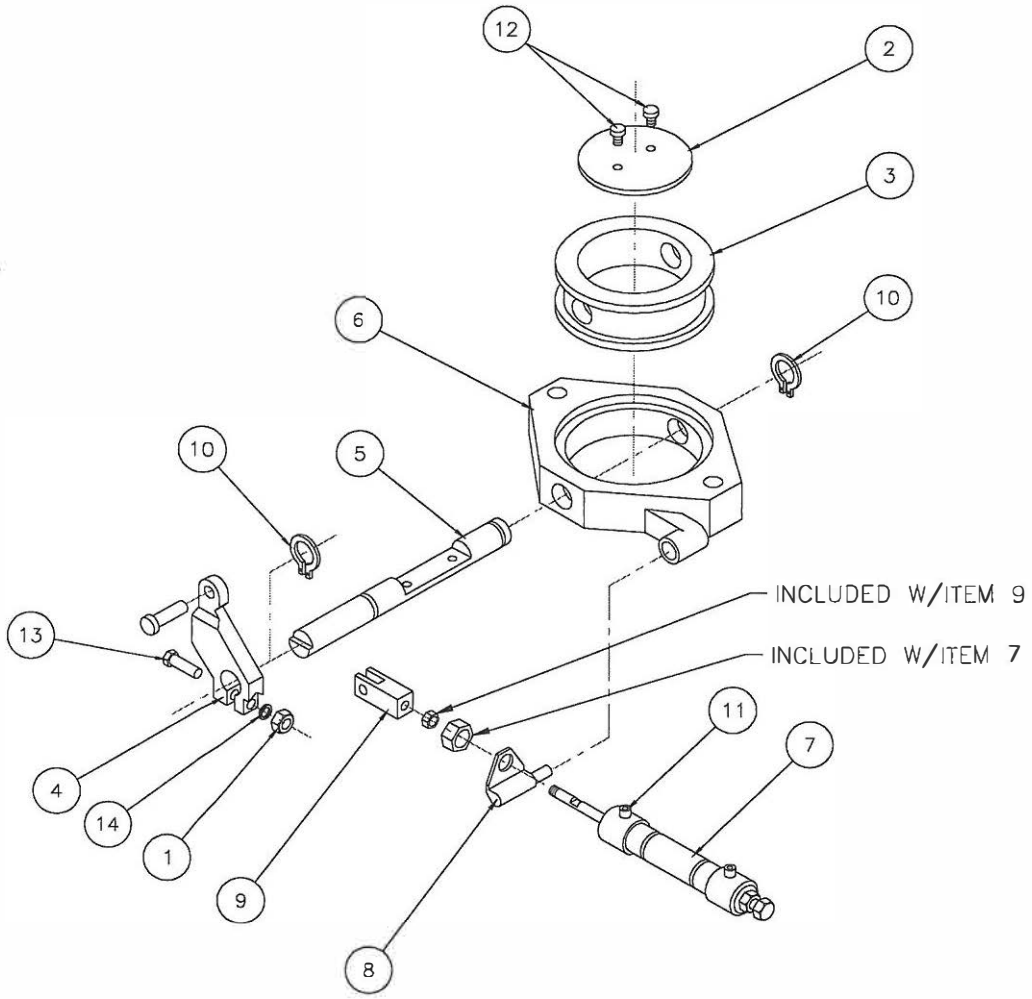

ABRASIVE VALVE ASSEMBLY

(Refer to replacement parts list on page 2-16)

M0311E

ADJUSTING AND CHECKING THE BLAST PATTERN

The appropriate adjustment of the blast pattern is of the utmost importance. A poor adjustment will not only reduce cleaning efficiency but also increase maintenance and replacement costs. A blast pattern test should be made when the equipment is first put in operation; when any decrease in blast efficiency is noted; after replacement or major maintenance have taken place; if a change is made in the size or type of abrasive material used. Goff recommends, as a good preventive maintenance measure, that the blast pattern be tested on regular basis. Only the blast wheel and abrasive recycling system should be operating during a pattern test.

The "hot spot" is that area of the work surface receiving the greatest portion of the abrasive blast. It is visible by the discoloration caused by frictional heat. The "hot spot" should be directed toward the center of the blast chamber to give the most effective cleaning pattern. If not properly directed, abnormal wear of the equipment and parts could occur.

To check location of the hot spot, place a painted metal plate in the direct path of the blast pattern at the average work height position. Turn the chamber, table or mill drive off using the selector switch pattern test or mill by-pass. Start machine as normal. Blast the plate for 15 seconds, and then visually locate the "hottest spot". Gloves should always be worn during the pattern test. The plate after blasting will be very hot and care should be taken when handling. The abrasive pattern is delivered in a clockwise motion. **Never attempt to operate a clockwise blast wheel in a counter-clockwise direction**.

The control cage, located at the center of the blast wheel, receives the abrasive from the storage hopper through the feed spout. The control cage, through the location of its opening, controls the point of delivery of the abrasive to the blast wheel blades. If the notch in the control cage is set in a 12 o'clock position then each blade will pick up abrasive at this point and deliver it in a downward thrust at a point below the blast wheel (approximately 6 o'clock). The point of delivery may vary with different types and sizes of abrasive.

To adjust the blast stream, "hot spot", the control cage must be rotated clockwise or counter-clockwise. The notch in the cage should always be facing approximately 180□ away from the blast pattern. Rotating the control cage in a clockwise direction will move the "hot spot" toward the left side of the blast chamber, moving the control cage in a counter-clockwise direction move the "hot spot" to the right. Initial adjustment should begin with the notch in the 12 o'clock position. Final adjustment will usually be less than 1" from this point. Be sure to turn the mill drive on before putting the blast machine back into productive operation.

The blast pattern is always set during factory testing prior to shipment, but testing is not always done with the same type and size of abrasive that will be used at the

customer's facility. Therefore, the pattern must always be checked at initial set-up under the condition the equipment will be operating.

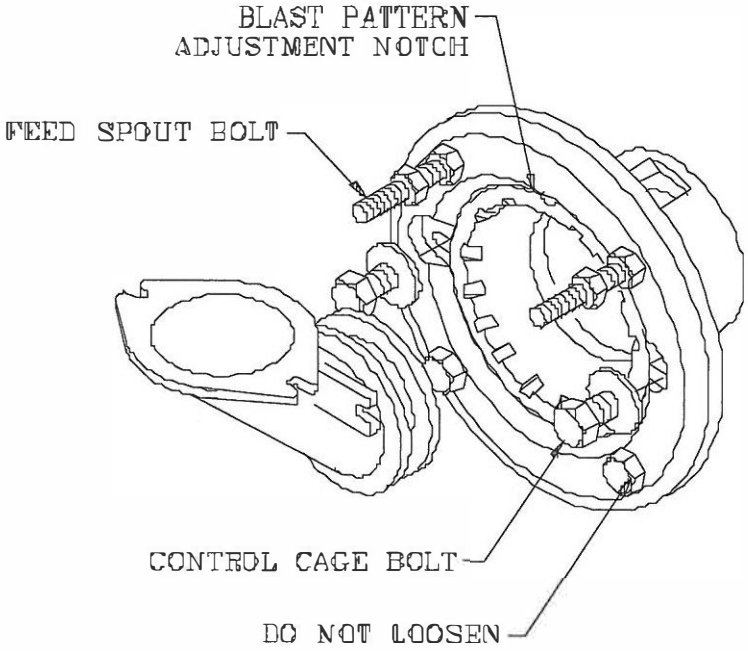

CONTROL CAGE DIAGRAM

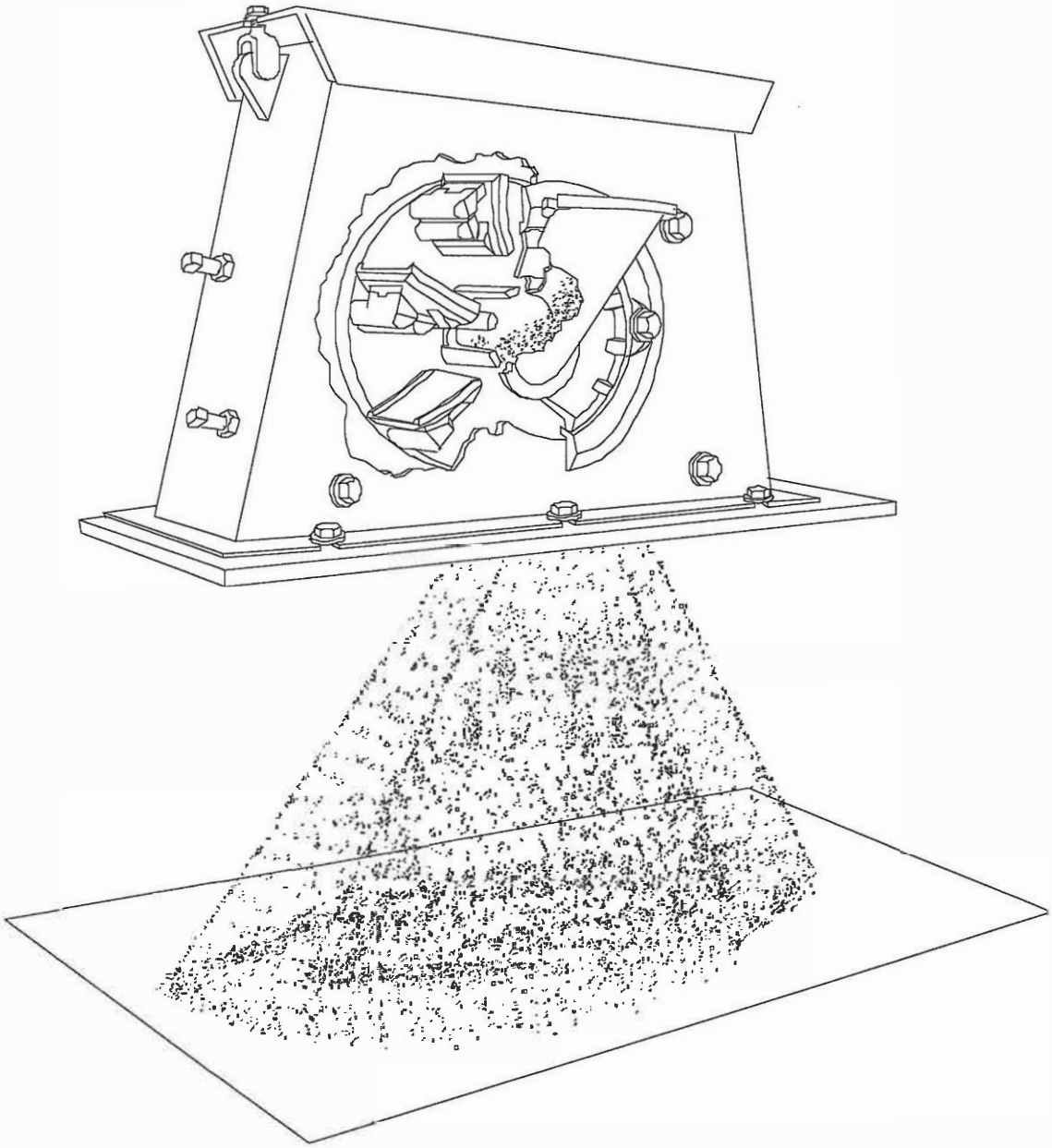

BLAST WHEEL ABRASIVE HOT SPOT DETAIL

M0064

SECTION 3 - CABINET ASSEMBLY

CABINET ASSEMBLY
(0118070-004)

Item Number	Part Number	Qty	Description
1	0004041	2	Blast wheel base plate gasket
2	0004346	14	Clamp
3	6000729	2	Bushing,- Idler
4	0123315-001	1	Belt assembly - Elevator/Hopper
5	0123315-002	1	Belt assembly - Elevator/Separator
6	0013996-003	2	Sleeve
7	0105763	2	Abrasive valve assembly
8	0147518-014	1	Blast wheel assembly CW
9	0147517-037	1	Blast wheel assembly CCW
10	8100688-001	1	Electrical components
11	0008784	2	Shaft – Spinner
13	0009057-001	2	Support hanger – Heat treated
14	0018063	1	Shaft – Span/Chamber
15	0010790	1	Bottom stub shaft 3" dia.
16	0011462	2	Stub shaft – Top screw
17	0013755	4	Seal
20	6001869	1	Bushing
21	6001495	1	Sprocket HTD
22	6001496	1	Sprocket HTD
23	6001497	1	Belt HTD
24	6001756	1	Bushing, 2"
25	6001868	1	Reducer, 100:1
27	0014069	1	Bottom screw shaft
28	0014075	2	Liner – side
29	0015436-001	2	Drive shaft
31	6100554	1	Belt, 5/8" Urethane x 72" lg
32	0109058-001	2	Seal ring - heat treat
33	0113084	2	Chamber liner weldment
34	0113767	2	Deflector weldment
36	0114017	1	Bottom screw conveyor
37	6000928	1	Bearing, 4-bolt, 3" bore
38	0123316-001	1	Top screw onveyor
41	5002496	4	Seal, 1-7/16" , 3" OD
42	5000860	48	Cast nut 1/2-13
43	6001285	2	Bushing, 1-7/16" bore
47	8002055	1	Motor, 3/4hp
49	6000485	6	Bearing, 1-7/16"
50	6000497	1	Bearing - Thrust 3"
52	6000723	1	Sheave, TL, 5.4PD
53	6000724	2	Sheave, TL, 9.4PD

CABINET ASSEMBLY
(0118070-004)

Item Number	Part Number	Qty	Description
54	6001075	1	Oil seal
55	6000612	1	Bearing 4 bolt 2"
58	6001285	2	Bushing, TLB 1-7/16"
59	6001366	1	Reducer, 40:1
60	6101391	2	Set collar 1-7/16" dia.
61	8000521	1	Motor, ½ Hp
62	0113290	2	Top liner weldment
63	5001000	40	Cast liner
65	0103183	1	Dribble valve 5"
66	0103013	1	Dribble valve 3"

* REPLACEMENT PARTS LIST IS SUBJECT TO CHANGE WITHOUT NOTICE.

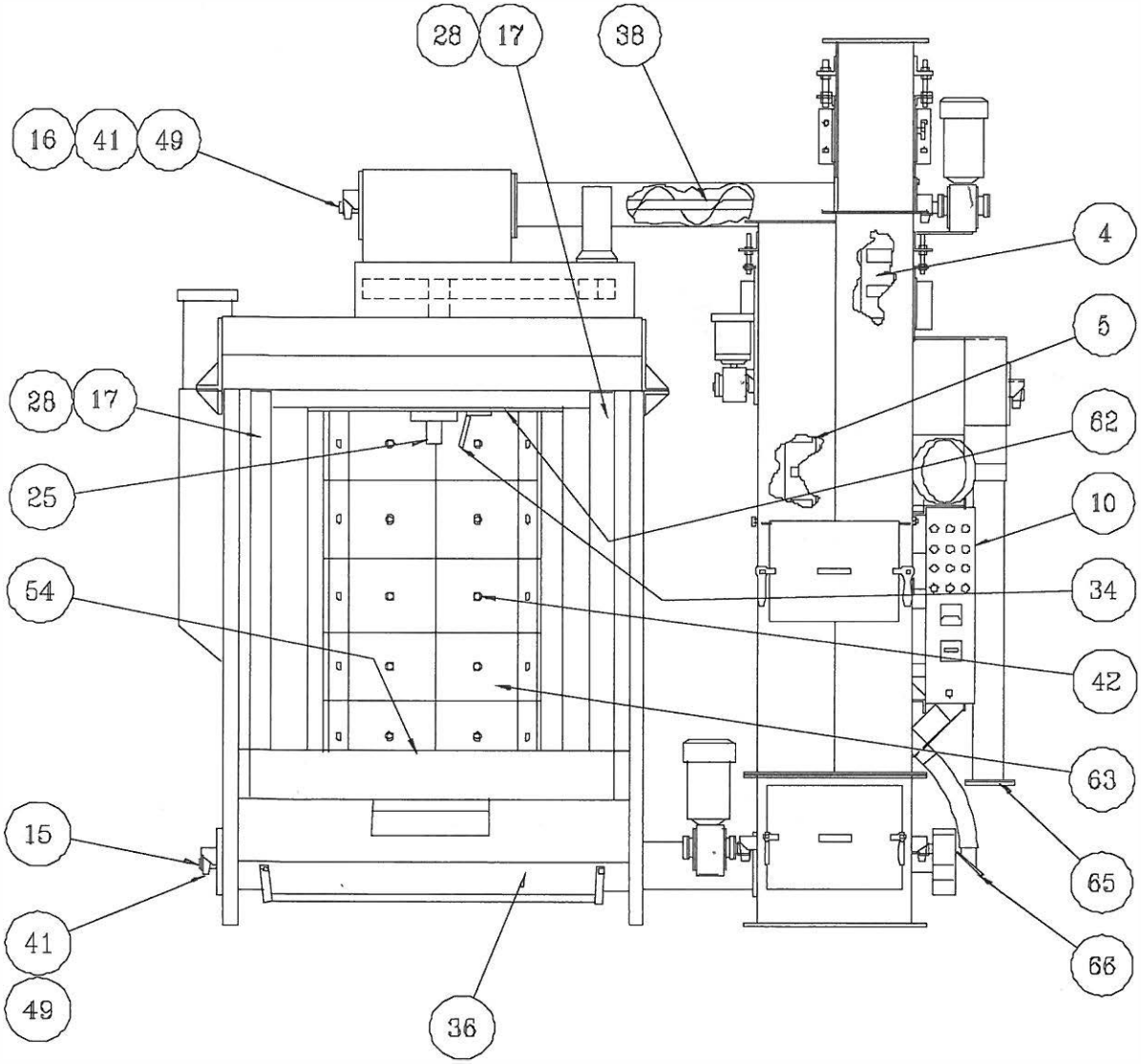

M0089J

FRONT VIEW DETAIL

(Refer to replacement part list on page 3-1)

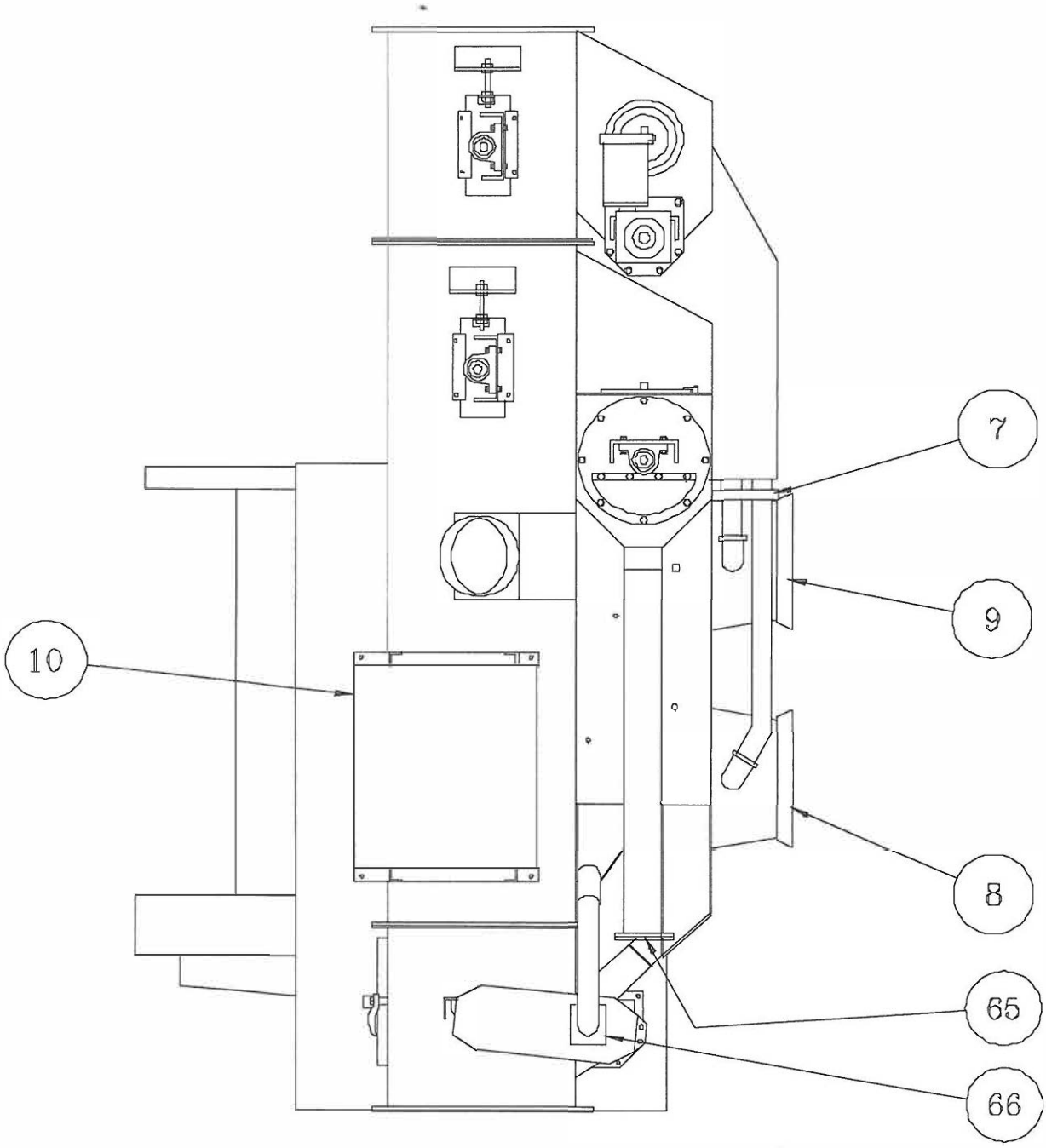

M0089K

SIDE VIEW DETAIL

(Refer to replacement part list on page 3-1)

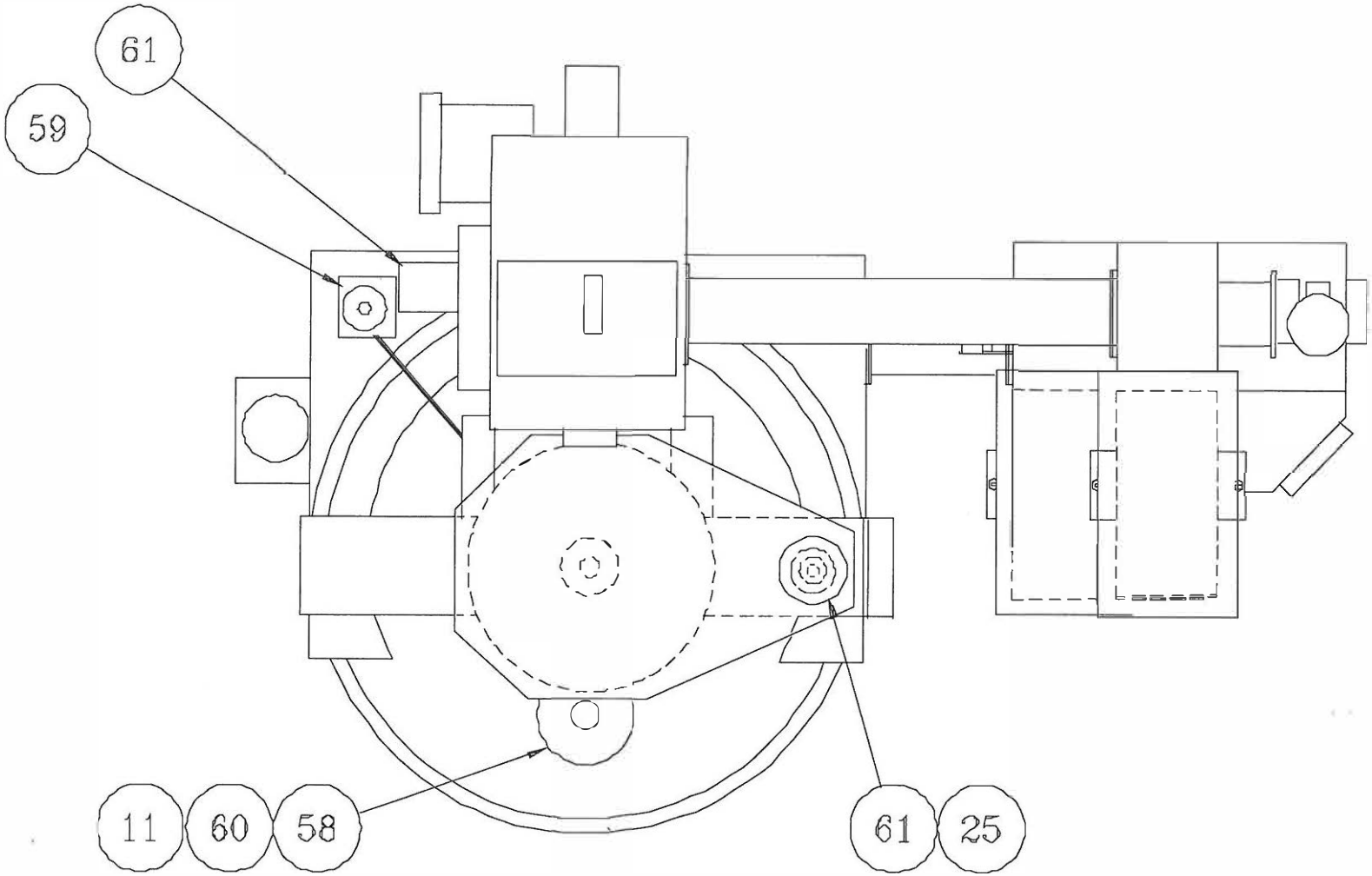

M0089L

PLAN VIEW DETAIL

(Refer to replacement part list on page 3-1)

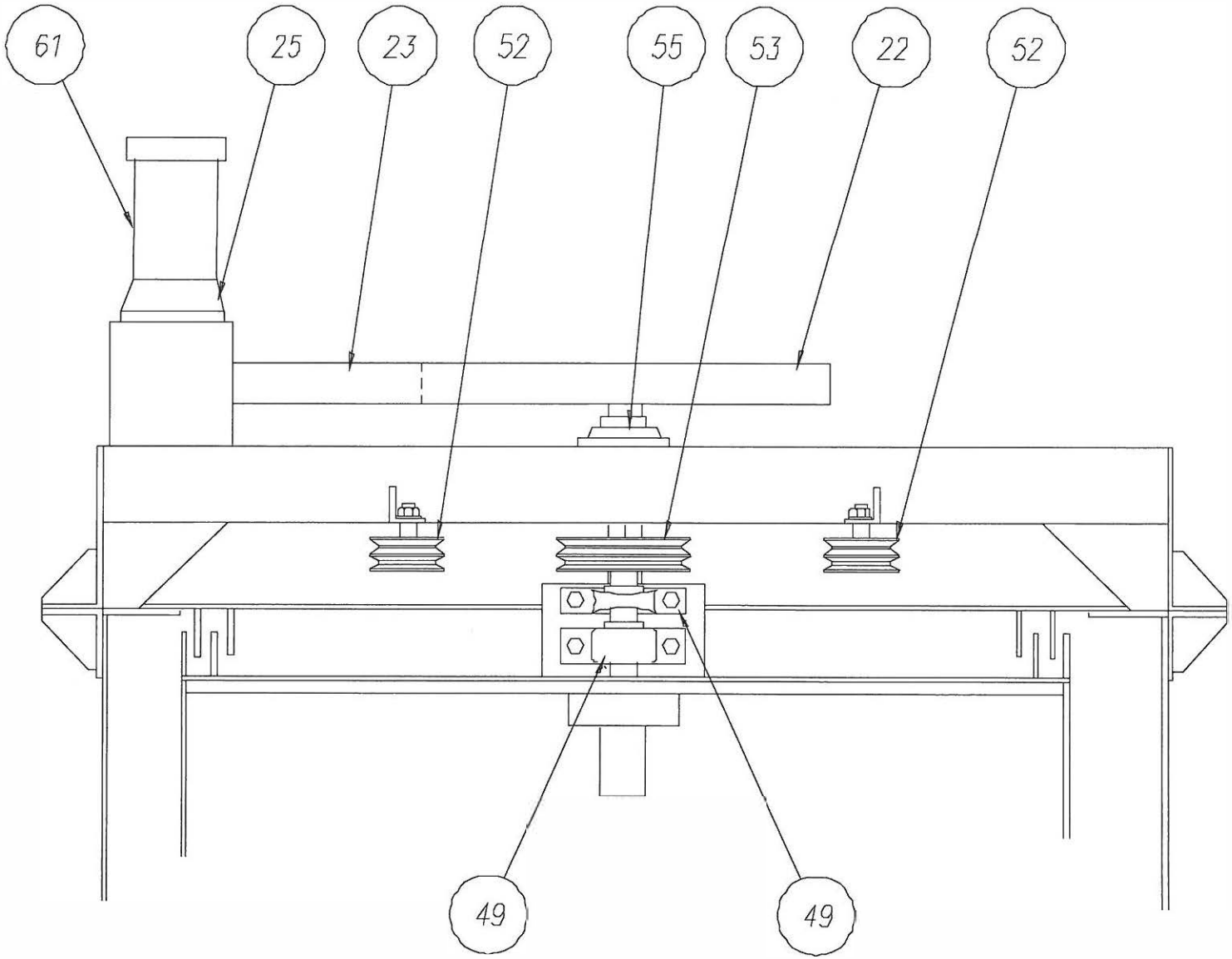

M0089I

SPAN/SPINNER DETAIL

(Refer to replacement part list on page 3-1

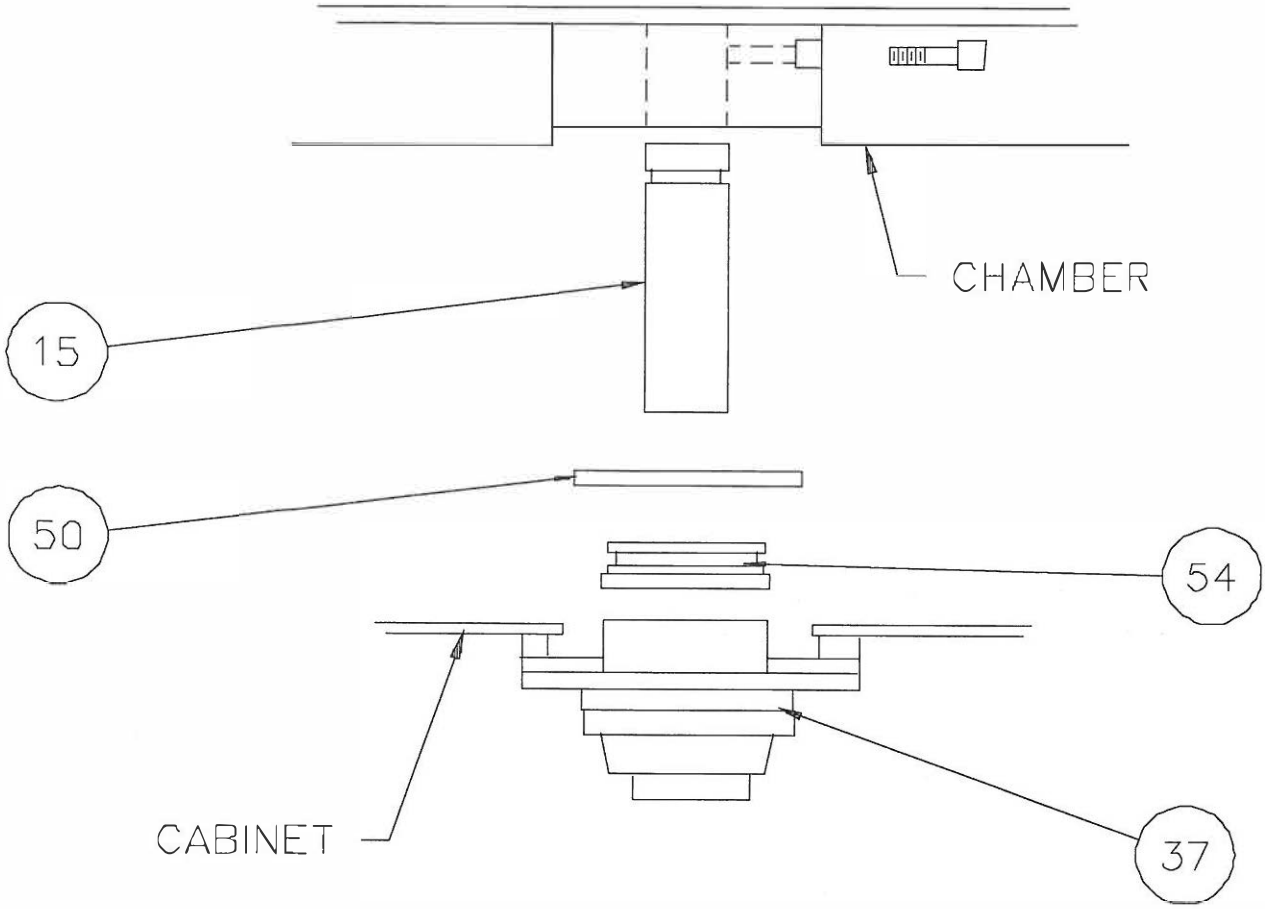

M0089H

CHAMBER/THRUST DETAIL

(Refer to replacement part list on page 3-1)

4-16
REF.

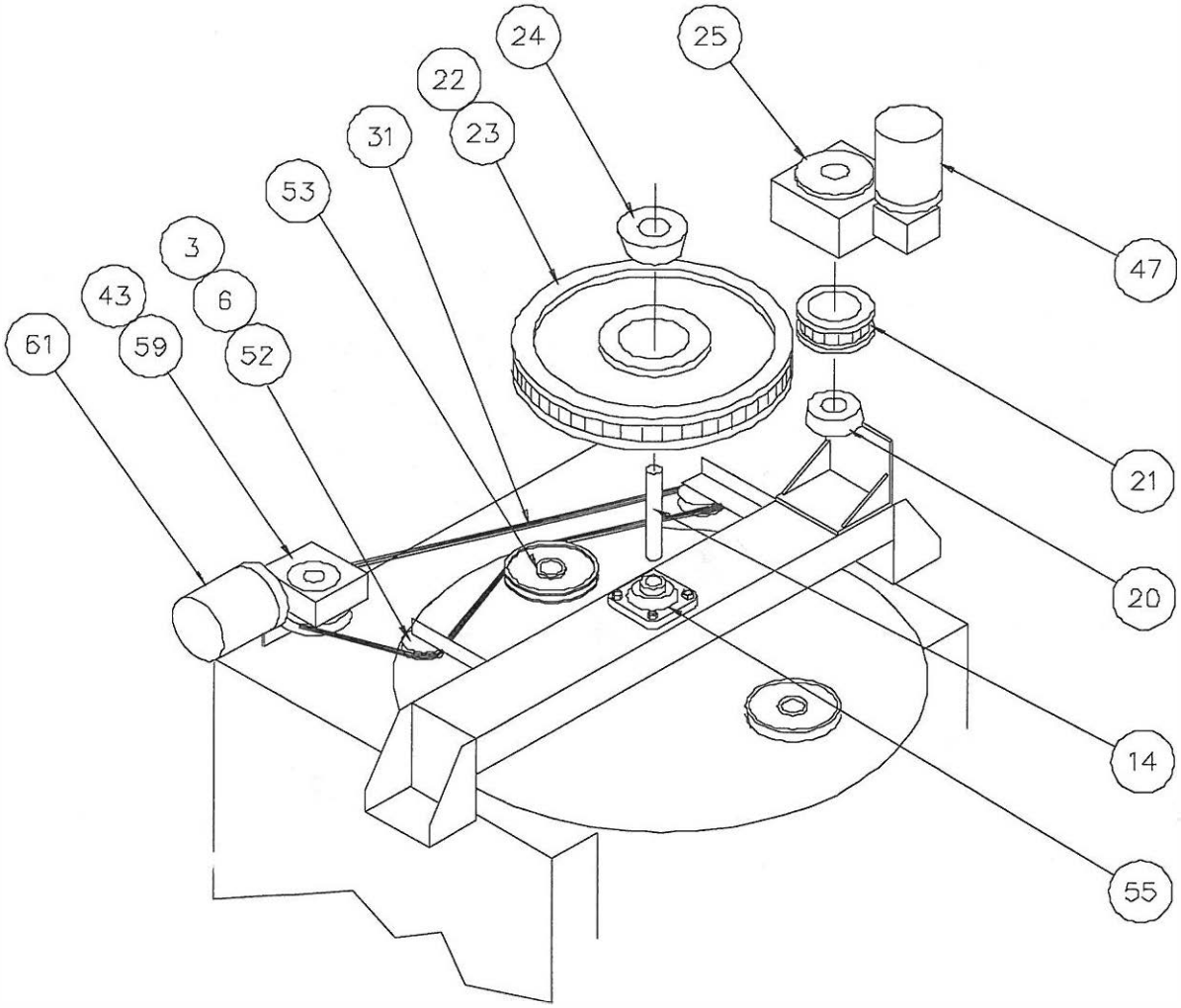

M0089G

SPAN DETAIL

(Refer to replacement part list on page 3-1)

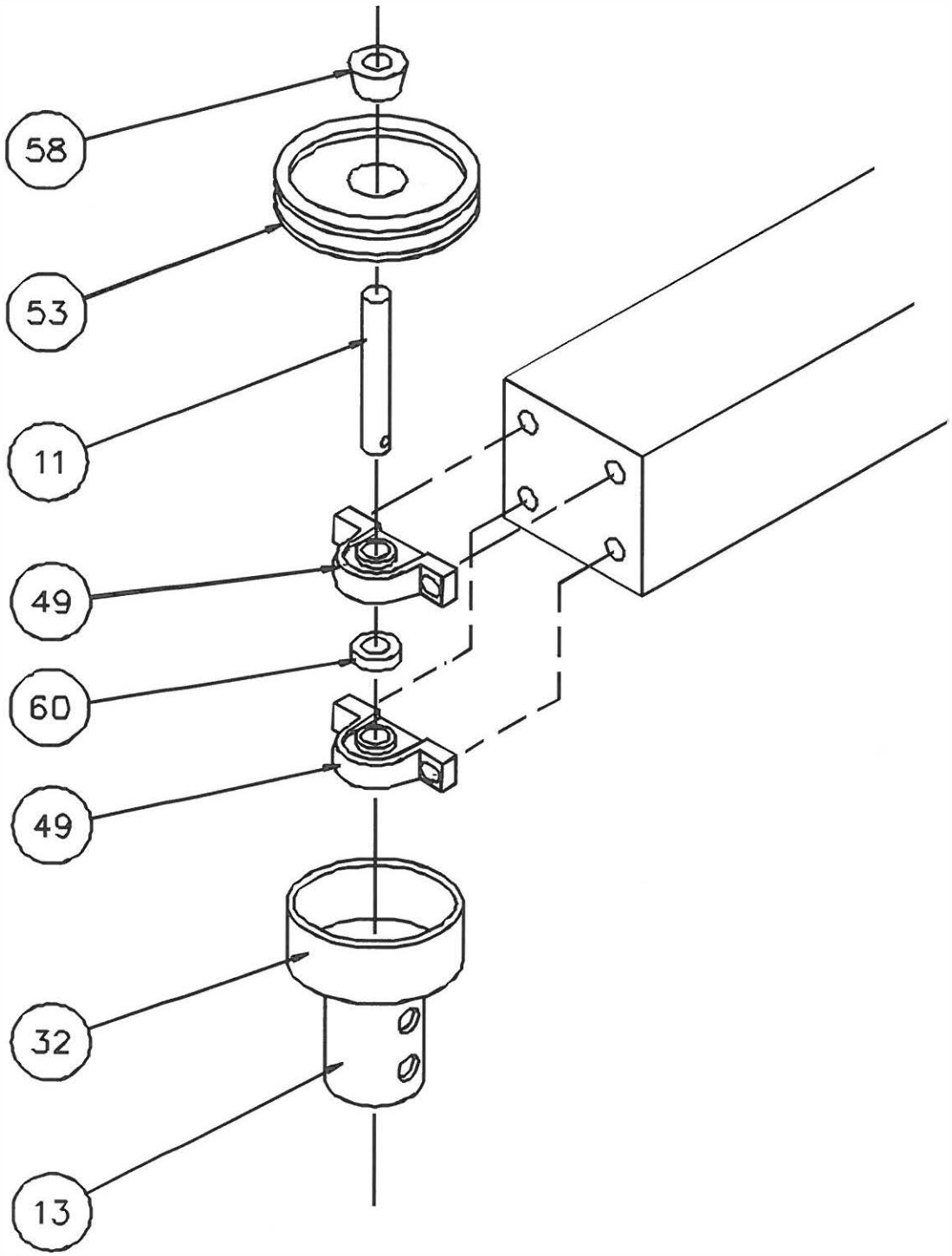

M0089F

CHAMBER DRIVE ASSEMBLY DETAIL

(Refer to replacement part list on page 3-1)

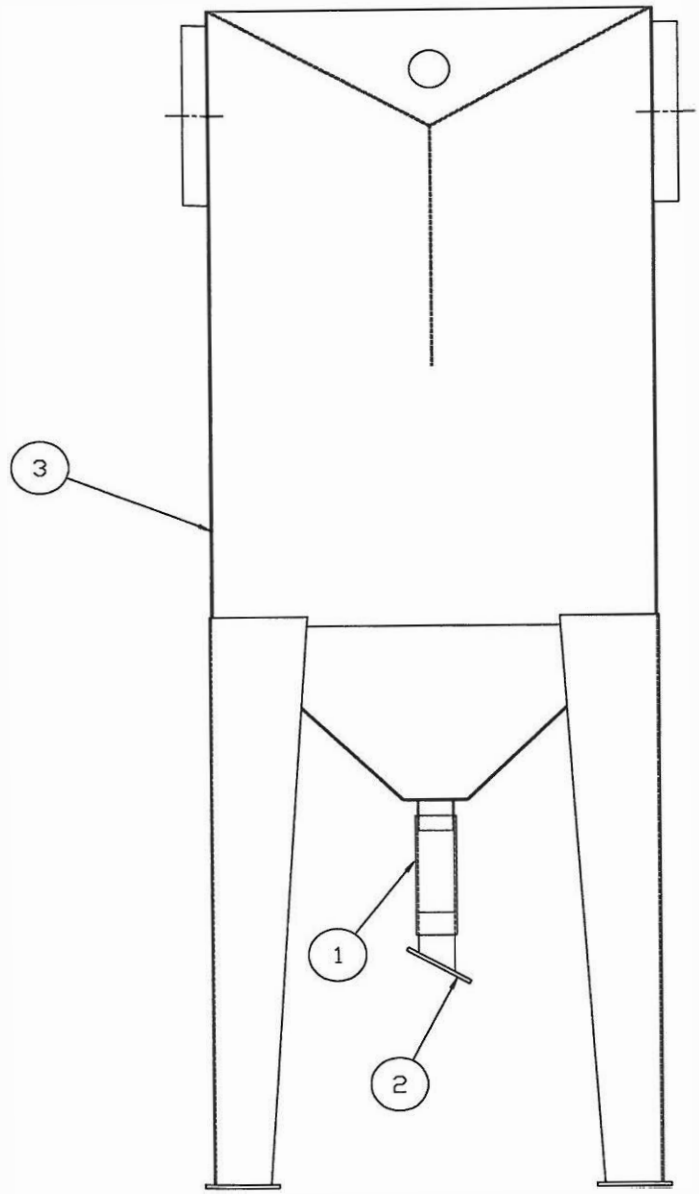

M045IJ

SHOT TRAP ASSEMBLY
(0116373)

Item Number	Part Number	Qty	Description
1	6101258-005	1	Flex hose
2	0100713	1	Dribble valve assembly
3	0116343	1	Weldment

* REPLACEMENT PARTS LIST IS SUBJECT TO CHANGE WITHOUT NOTICE.

SECTION 4 - ABRASIVE RECYCLING SYSTEM

FES ASSEMBLY
(0104747-005)

Item Number	Part Number	Qty	Description
1	0103760-003	1	Elevator top assembly
2	0103757	1	Elevator separator assembly
3	0104420-005	1	Elevator bottom assembly
4	0114015	1	Adder hopper

ELEVATOR TOP SECTION ASSEMBLY
(0103760-003)

Item Number	Part Number	Qty	Description
1	0002490	4	Guide plate
2	0002489	4	Clamp plate
3	0003765	1	Elevator head section shaft
4	6001200	1	Hand knob
5	0011288-001	2	Take-up screw
6	0102905	1	Bearing hanger weldment
7	0103597	2	Take-up elevator
8	0002447	1	Cover plate
9	6000485	2	Bearing, 1-7/16"
10	6000606	1	Bushing, 1-7/16" w/keyway
11	6001244	1	Pulley
12	6001387	1	Reducer 25:1
13	8001027	1	Motor 3/4 Hp 3 Ph
14	5002496	3	Felt seal
15	0002438	3	Seal retainer
16	0024016	3	Seal bearing
17	0102997	1	Retainer cover

* REPLACEMENT PARTS LIST IS SUBJECT TO CHANGE WITHOUT NOTICE.

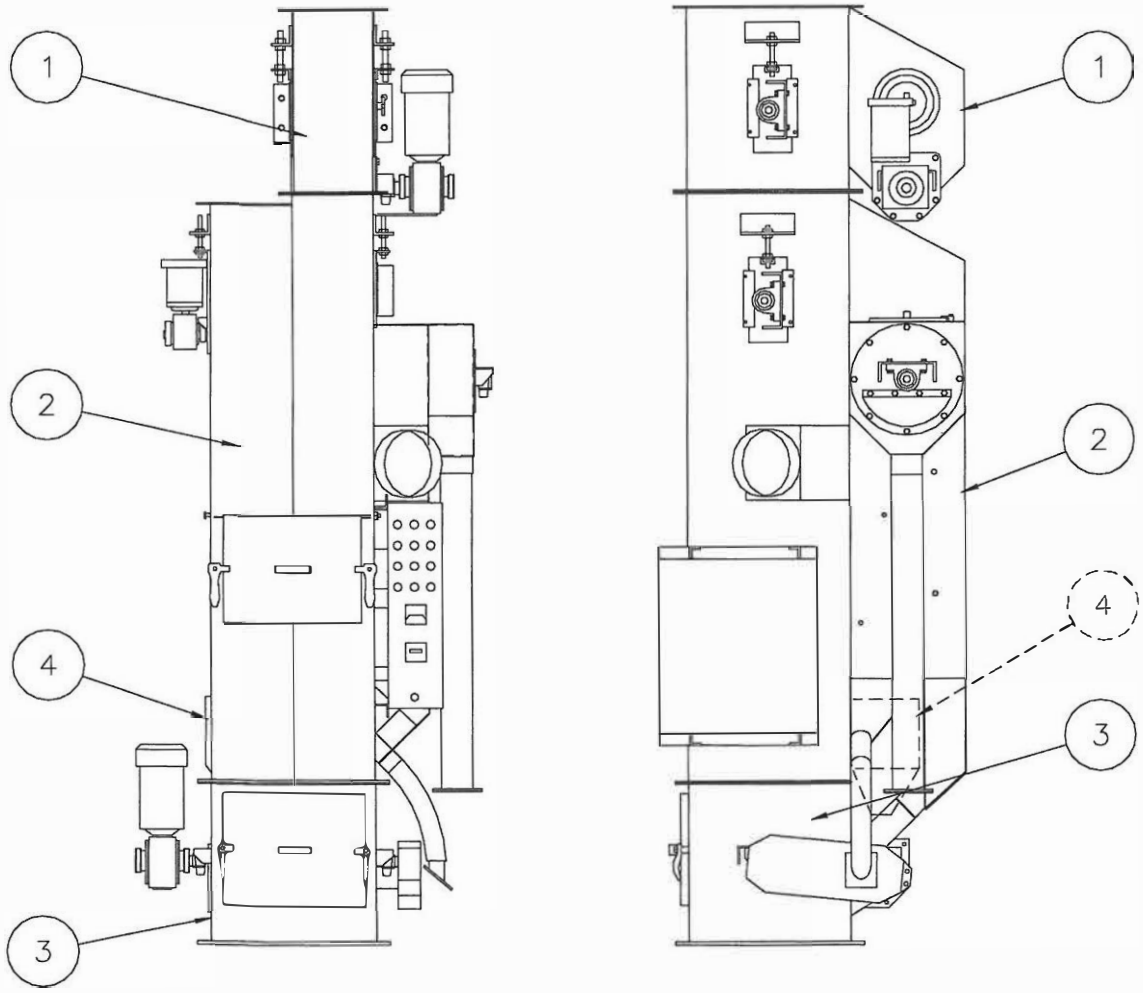

M01054

ELEVATOR SEPARATOR - MAIN ASSEMBLY

(Refer to replacement parts list on page 4-1)

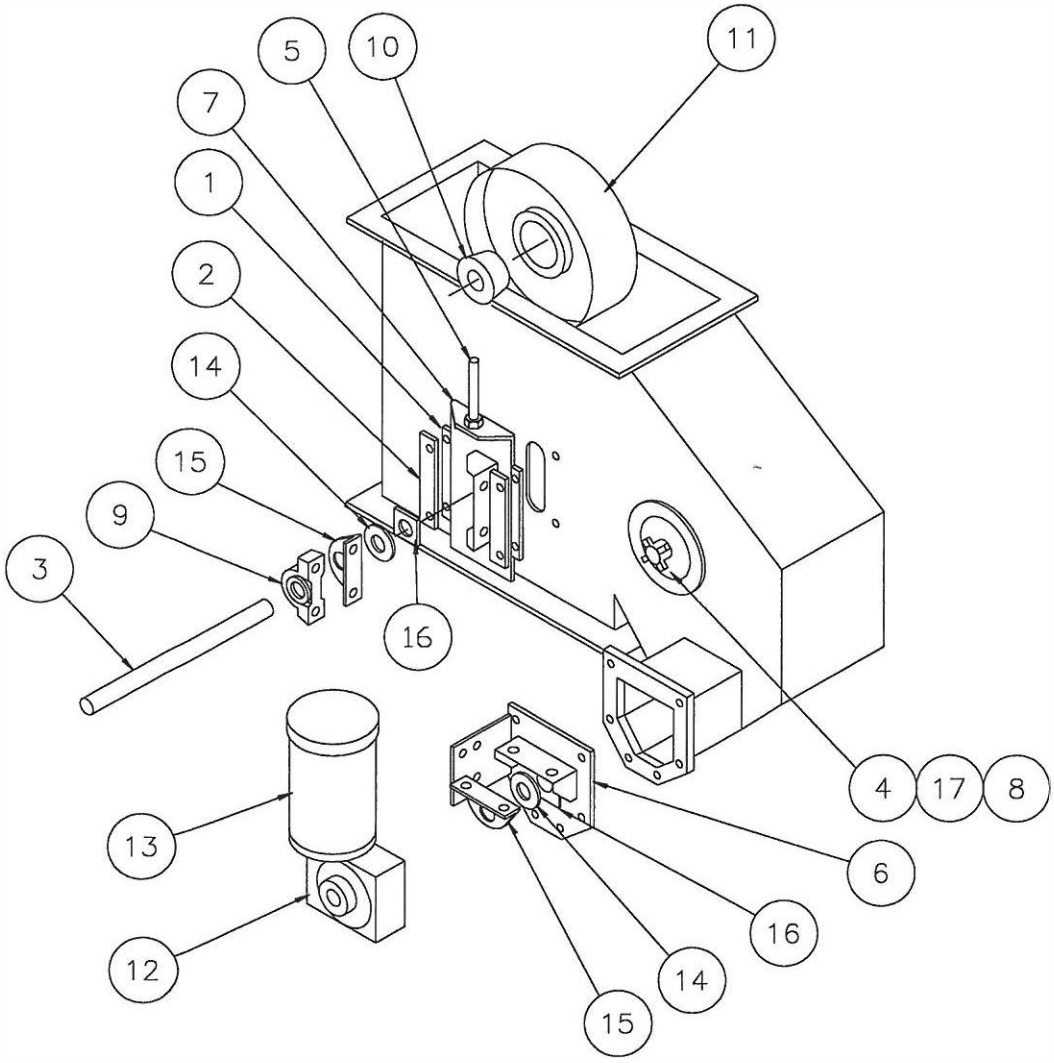

M0448B

ELEVATOR TOP SECTION ASSEMBLY

(Refer to replacement parts list on page 4-1)

ELEVATOR SEPARATOR ASSEMBLY
(0103757)

Item Number	Part Number	Qty	Description
1	0102825	1	Elevator/Separator weldment
2	6001295	4	Ball spring plunder
3	0002931	2	Spreader plate
4	0024016	4	Seal bearing
5	8001032	1	Motor, 1/2 HP
6	0002490	4	Guide plate
7	6001381	1	Reducer, 50:1
8	0103208	1	Elevator cover weldment
9	6001200	1	Hand knob
10	0103183	2	Dribble valve assembly
11	0102905	1	Bearing hanger weldment
12	0106457-002	1	Screen weldment
13	0103013	1	Dribble valve assembly
14	5002496	4	Seal, 1-7/16"
15	0002438	4	Retainer seal
16	6000485	3	Bearing, 1-7/16"
17	0002509	1	Retainer curtain
18	0002936	1	Rotary screen curtain
19	6001244	1	Pulley
20	6000606	1	Bushing, 1-7/16" w/keyway
21	0103743	1	Access door weldment
22	0102862	1	Access door weldment
23	0011288-001	2	Take-up Screw
24	6001233	2	Latch, LH
25	0105731	1	Rotary screen weldment
26	0103144	2	Swinging gate weldment
27	0102935	2	Baffle weldment
28	0106149	2	Refuse gate
29	6001232	3	Latch, R/H
30	0103597	2	Take-up elevator belt
31	0002489	4	Clamp plate
32	6101252-001	1	Tubing, flex steel
33	6101312-002	1	Tubing, flex steel
34	0003767	1	Elevator leg shaft
35	0108816	1	Elevator cover weldment

* REPLACEMENT PARTS LIST IS SUBJECT TO CHANGE WITHOUT NOTICE.

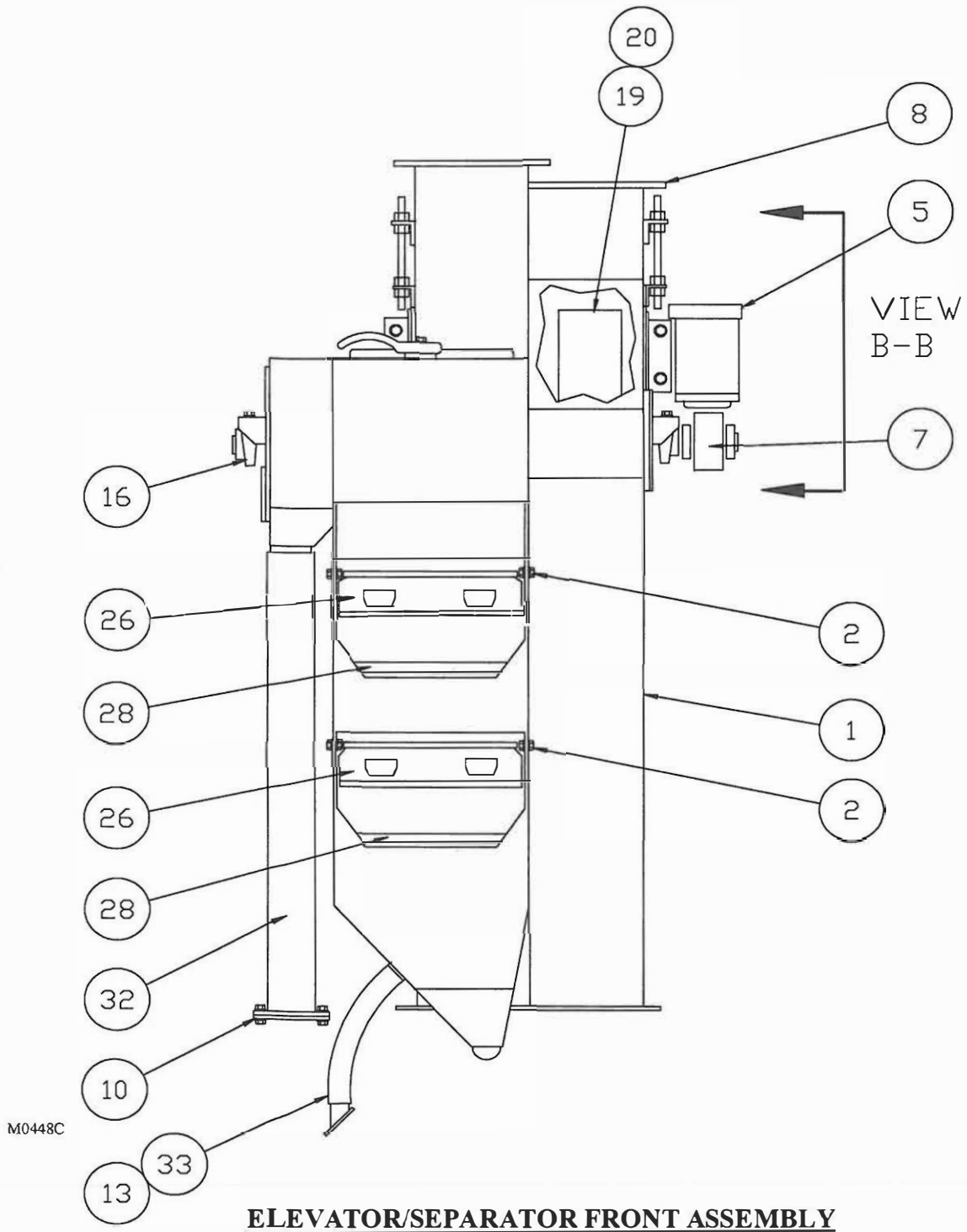

ELEVATOR/SEPARATOR FRONT ASSEMBLY

(Refer to replacement parts list on page 4-4)

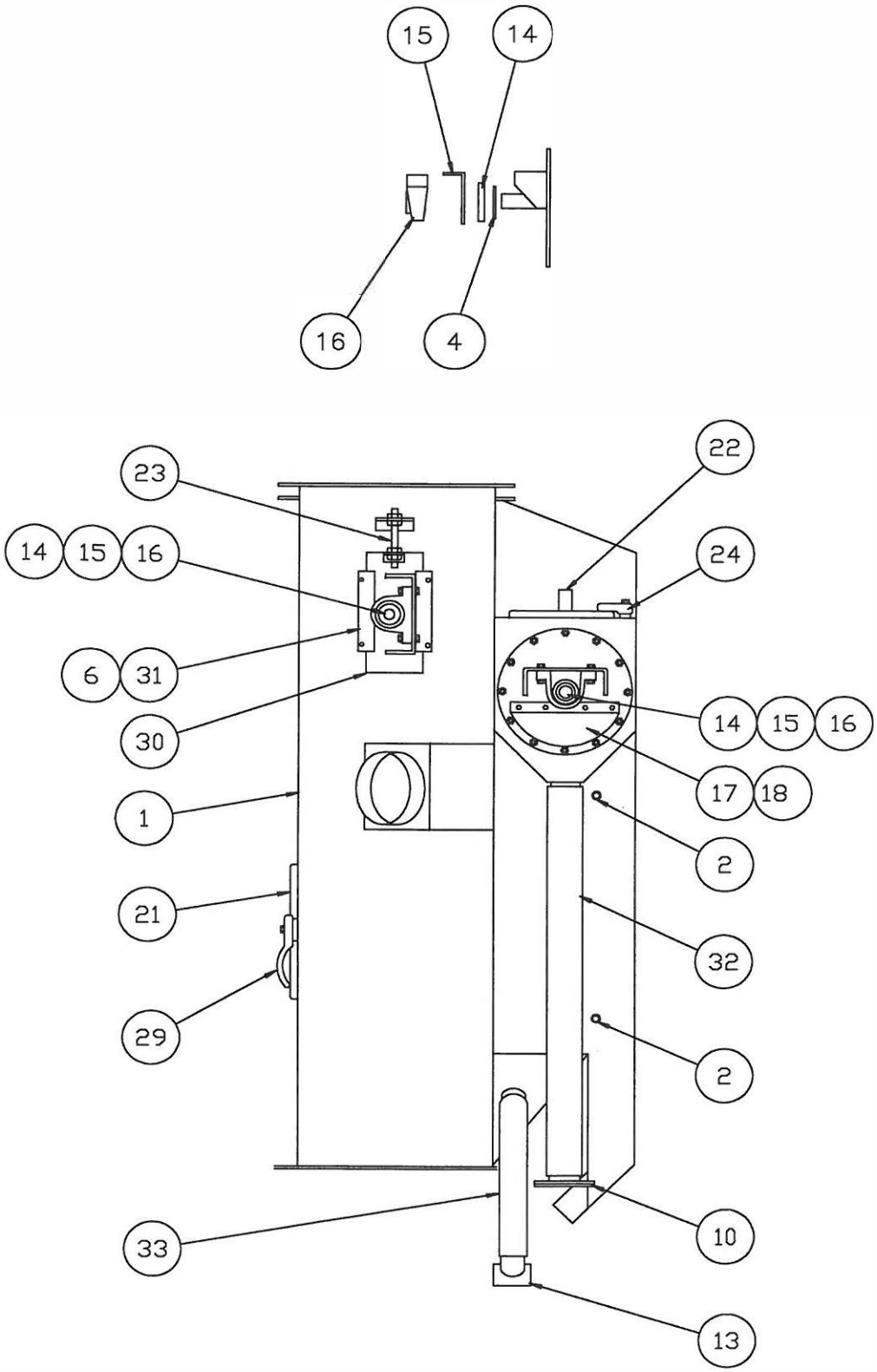

ELEVATOR/SEPARATOR ASSEMBLY

(Refer to replacement parts list on page 4-4)

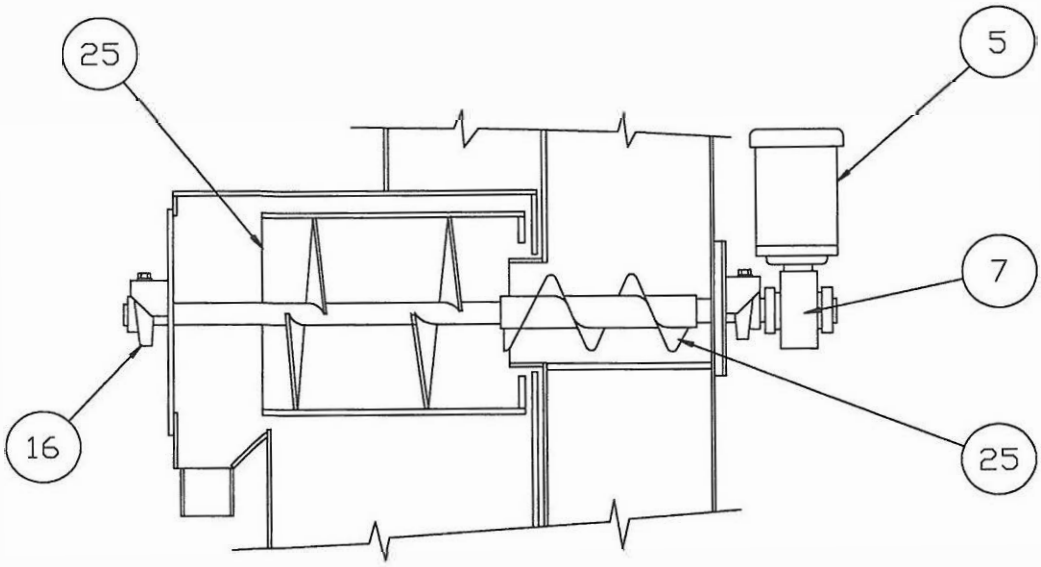

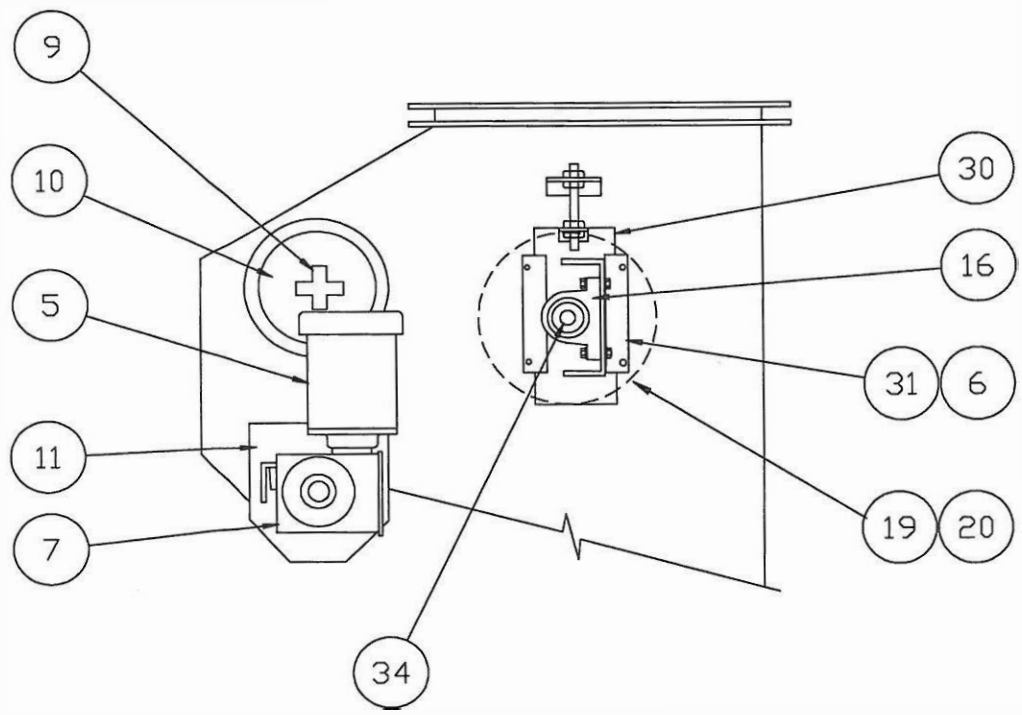

M0448E

ELEVATOR/SEPARATOR ASSEMBLY

(Refer to replacement parts list on page 4-4)

ADJUSTMENT OF THE ABRASIVE SEPARATOR

To function properly, the abrasive separator must have an adequate air flow. The double lip separator on this unit will require a minimum air flow of 400 CFM in order to function efficiently. With the correct air flow, the abrasive separator can be adjusted as follows.

Abrasive enters the separator through the rotary scalping screen. (Item #25) The screen permits the abrasive to fall through, but carries trash and tramp metal out of the separator. Abrasive falls down in the upper portion of the separator against an adjustable spreader gate. (Item #3) This gate should be adjusted up or down to cause the abrasive to spread out the entire 20" width of the separator. This adjustment should be made with the swinging gate removed. (Item #26) If the area around the rotary screen should fill with abrasive, the spreader gate should be raised slightly to permit free abrasive flow.

With the swinging gate in place (Item #26) the abrasive should form an even curtain across the entire width of the separator. Fill the cups, located on the swinging gate, with abrasive to control the curtain. The abrasive should form a constant and even curtain.

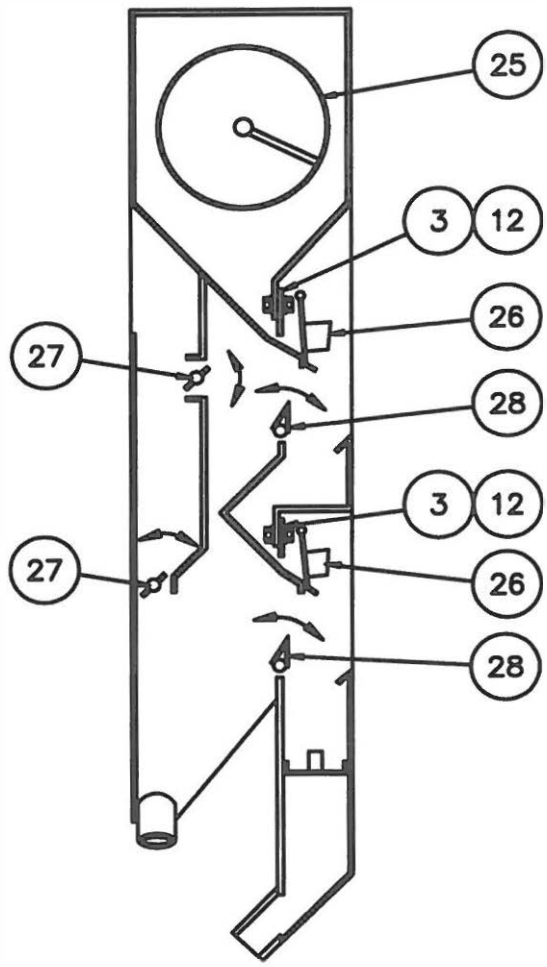

M0088F

As the abrasive falls down to the next separator section, air is being pulled through the curtain of abrasive by the dust collector. This air flow removes the sand and fine contaminants from the abrasive. The size and amount of contaminant removed is determined by the adjustment of the refuse gate (Item number 12) and the air baffle (Item number 27). The refuse gate and the air baffle must be set in combination in order to function properly. Size and type of abrasive used will determine correct setting. Adjusting the refuse gate toward the falling curtain of abrasive will adjust the size and quantity of particle removed from the abrasive. Moving the refuse gate away decreases the size and quantity of particle removed. Adjust the air baffle and refuse gate, until as much sand and unusable abrasive as possible are removed, but no usable abrasive is removed.

Adjust upper and lower separator to maximum efficiency and to prolong machine blast unit life.

BOTTOM SECTION ASSEMBLY
(0104420-005)

Item Number	Part Number	Qty	Description
1	0003742	2	Seal, Retainer, 2"
2	0003756	1	Shaft, Elevator Bottom
3	0003761	2	Latch, Spacer
4	0118756	1	Access Door Weldment
5	0103784	1	Lower Chain Guard Assembly
6	0103980	1	Reducer Stabilizer Weldment
7	6001824	2	Pulley
8	0113997	1	Elevator Bottom Weldment
9	5000133	2	Seal, 4"OD x ½" Thick
10	6001843	2	Bushing, 1-7/16" Bore
11	6000563	2	Bearing, 2" Bore
12	6001232	1	Latch, RH
13	6001233	1	Latch, LH
14	6001237	1	Bushing, TLB 1610, 1-7/16"
15	6001240	1	Torque Tamer
16	6001343	1	Reducer, 20:1, 2"
17	6000603	1	Sprocket, 428 TLB
18	6101361	1	Sprocket Plate, 3" Bore
19	8000549	1	Motor, 2HP

* REPLACEMENT PARTS LIST IS SUBJECT TO CHANGE WITHOUT NOTICE.

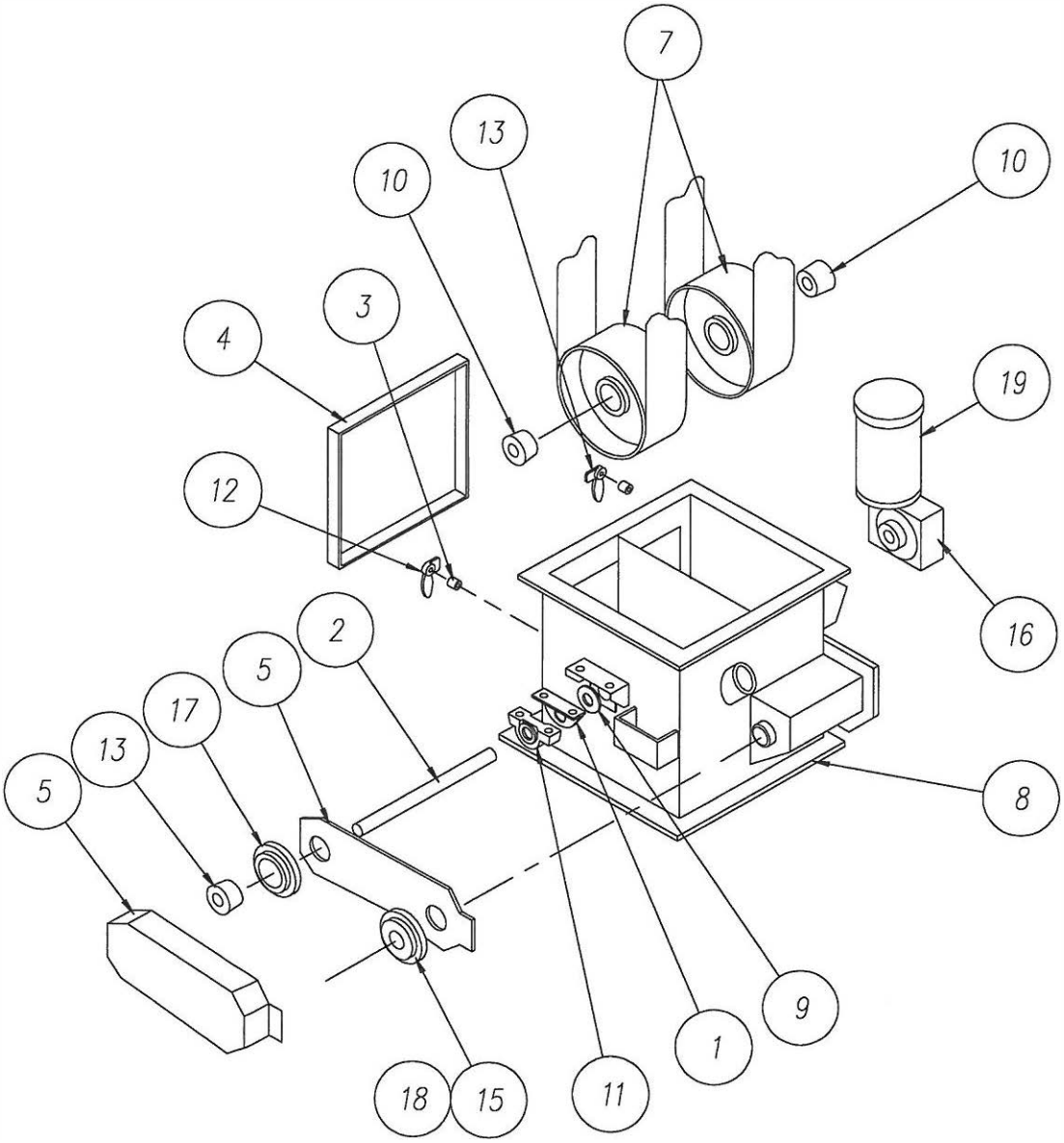

M0554I

ELEVATOR BOTTOM ASSEMBLY

(Refer to replacement parts list on page 4-10)

ABRASIVE VALVE
(0114811)

Item Number	Part Number	Qty	Description
1	7002832	1	Hex nut UNC 1/4-20
2	5002058-001	1	Butterfly disc – Heat treated
3	5000121	1	Valve body insert
4	5000152	1	Lever
5	0003943	1	Shaft
6	5100103	1	Valve body
7	6000221	1	Air cylinder
8	5100190	1	Cylinder mount bracket
9	6000142	1	Clevis rod
10	6000936	2	Ring retainer
11	6001171	2	Fitting
12	7008878	2	Screw 10-24
13	7000914	1	Hex bolt 1/4-20 x 1-1/2
14	003004	2	Flat washer 1/4"

* REPLACEMENT PARTS LIST IS SUBJECT TO CHANGE WITHOUT NOTICE.

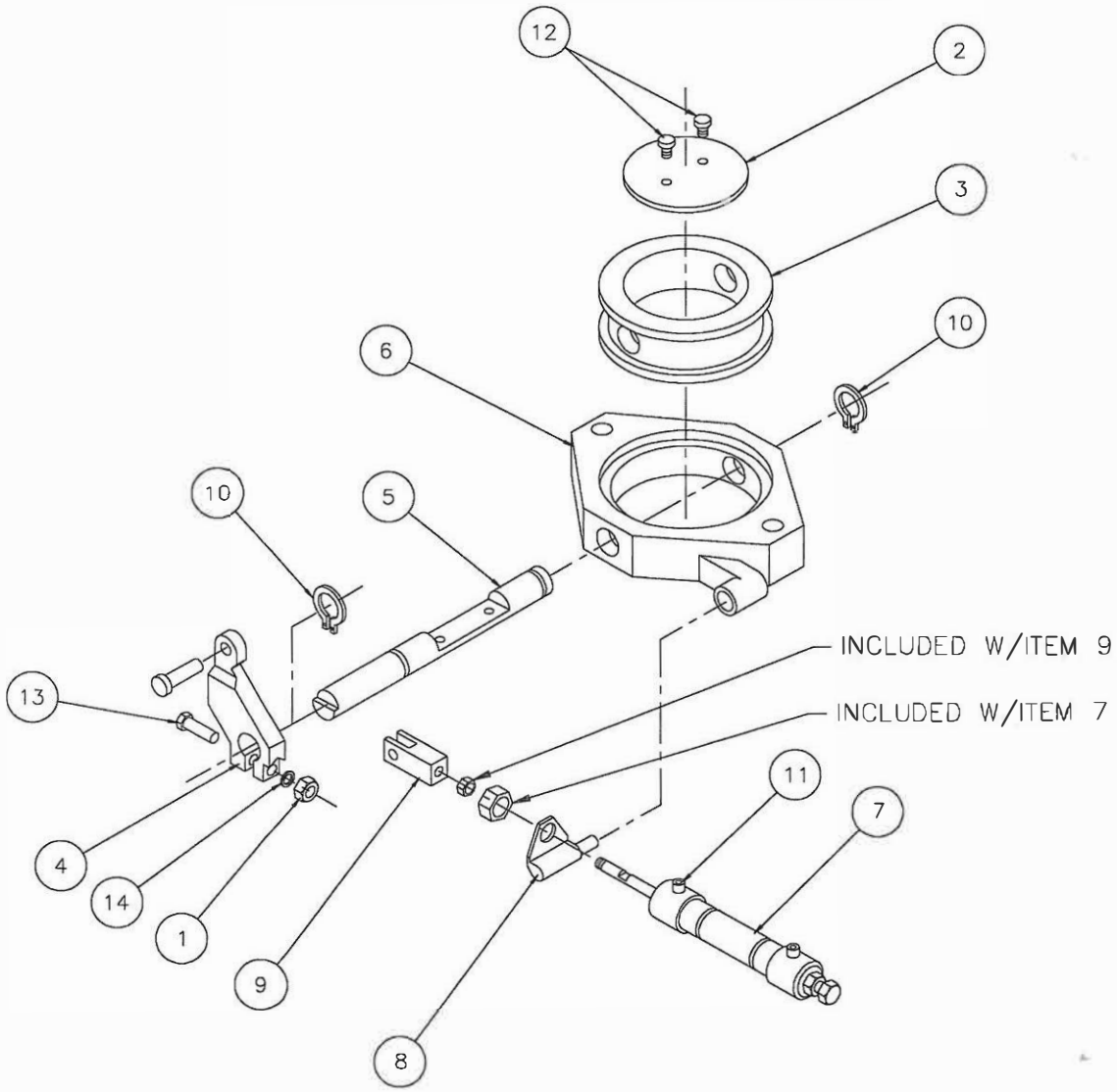

M0311E

ABRASIVE VALVE ASSEMBLY

(Refer to replacement parts list on page 4-12)

ABRASIVE STORAGE HOPPER

The storage hopper abrasive level should be full at the start up of machine. After the end of each shift allow the abrasive to recycle back into the hopper. While the abrasive is re-cycling back keep the blast wheels off and the abrasive control valves to the blast wheel closed. After a few minutes stop recycling abrasive. Inspect hopper and add abrasive as needed. While the machine is blast cleaning parts, the abrasive volume in the hopper will decrease until the abrasive is recovered automatically from the machine. Depending on the machine, it takes the abrasive 15-45 seconds to be recycled back from the blast wheels to the hopper. Some abrasive will be lost due to abrasive breaking apart after contact with parts. This unusable abrasive is removed by the air wash separator making it necessary to replace abrasive periodically. An adequate accumulation of abrasive in the hopper will not only ensure a steady flow to the blast wheels, but will also prevent wear on the hopper by keeping the sides of the hopper protected against the abrading action of cascading abrasive particles. The correct abrasive level in the hopper should be maintained by periodic additions of new abrasive to compensate for abrasive breakdown.

AUTO ABRASIVE ADDER HOPPER
(OPTIONAL EQUIPMENT)

The auto abrasive adder hopper adds abrasive to the machine's abrasive recycling system while the machine is blast cleaning parts. A sensor in the abrasive storage hopper alerts the auto abrasive adder hopper's abrasive control valve to add more abrasive into the recycling system when the abrasive volume in the storage hopper become too low. Some abrasive will be lost in the cleaning process due to abrasive breaking apart after contacting parts. This unusable abrasive is removed by the air wash separator making it necessary to replace abrasive periodically. At the end of each shift make sure the auto abrasive adder hopper is full.

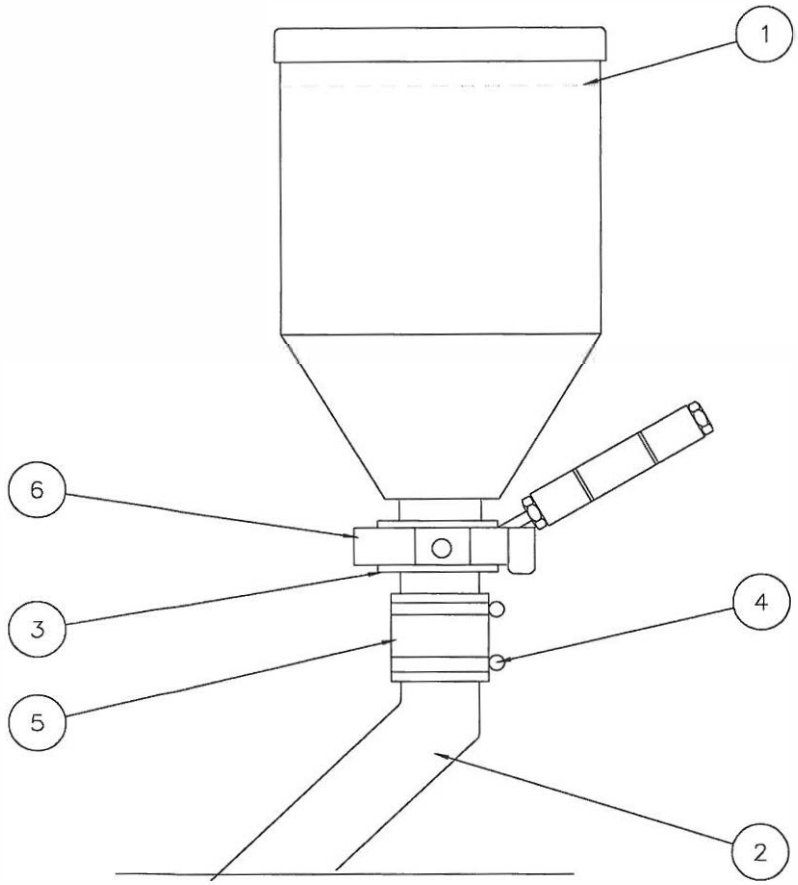

M0447J

ADDER HOPPER ASSEMBLY
0114015)

Item Number	Part Number	Qty	Description
1	0011929-005	1	Screen
2	0014014	1	Lower pipe
3	0106207	1	Flange adapter
4	6001552	2	Clamp
5	6001333	1	Hose
6	0114811	1	Abrasive valve assembly

* REPLACEMENT PARTS LIST IS SUBJECT TO CHANGE WITHOUT NOTICE

ELEVATOR BELT MAINTENANCE

Belt tension should be checked regularly to insure proper operation of the recycling system. The following information should be considered when checking belt tension.

1) The pulley in the elevator bottom section should rotate constantly without slippage or hesitation.
2) The unloaded belt should run generally in the center of the elevator casing with minimum movement from side to side.
3) Elevator buckets should not strike the sides of the casing.
4) It should not be possible to manually slide the elevator belt back and forth across the face of the pulley when the elevator is stopped. However, the tension on the elevator belt should not be so great that there is danger of tearing out the splice.

The elevator belt may become stalled or jammed for several reasons.

1) If the blasting operation is started without the elevator running.
2) If the elevator belt slips because of improper tension adjustment.
3) If abrasive is added without the elevator system operating.
4) If abrasive is added to the machine at a rate faster than the elevator is capable of handling.

If a stalled elevator condition exists, the abrasive feed to the blast wheels and all power sources to the machine should be cut off immediately. It is advisable to use a scoop or scraper for removing abrasive from a jammed elevator. **DO NOT USE YOUR HANDS!** The rubber elevator belt in this jammed condition has been stretched and is probably under tension. At some point, while the excess abrasive is being removed, the tension in the stretched belt will be released causing the pulley to rotate very rapidly in the reverse direction. Serious personal injury could result if a hand or forearm were in the path of the rotating elevator buckets.

ABRASIVE

The abrasive has a major influence on the efficiency of cleaning and on the profitability of the blast cleaning system. We recommend the use of tough cast steel abrasive or cut wire shot.

We strongly advise against using chilled iron shot. It is less durable and its sharp edges and particular texture will cause premature wear of blast wheels and liners

OPERATING MIX

In most cases, the operating mix consists of rounded grains of various sizes. The medium grain size forms the major portion. There must, however, also be active portions of coarse and fine granulates.

The coarse grains (nominal grain size) remove the surface layer. The medium sized grains perform the main cleaning job, whereas the small sized grains clean and smooth the details of the surface.

This operating mix results from the wear of the abrasive during operation of the blast cleaning system and should be kept constant by refilling abrasive with the nominal grain size. For the first filling of the blast cleaning system, a simulated operating mix must be composed.

In order to do so, the following grain sizes should be used: approx. 30% nominal size and 70% of the next two sizes smaller than the nominal size. Thereafter the refill, carried out at regular intervals, consists only of the nominal grain size.

The quality of the abrasive should be checked at regular intervals, as poor abrasive has a strong negative effect on the efficiency and profitability of the blast cleaning system.

As a general rule: Abrasive grains smaller than 1/3 of the nominal grain size have to be removed in the air separator.

In order to keep the abrasive consumption as low as possible, special care must be taken to limit the abrasive is entrained with the clean castings.

The proper selection of abrasive is important, not only from the standpoint of blasting results but also from a maintenance standpoint. An abrasive of good quality will help to keep operating costs at a minimum. Abrasives are generally classified in shape as either "shot" or "grit" and are designated as such be the letters "S" for shot and "G" for grit preceding the size number. Grit is

angular in shape presenting numerous sharp cutting edges especially adaptable for matte or etched finishes. Shot is spherical in shape which produces peening to provide a smooth, more attractive finish. Many different sizes and types of shot and grit are available in today's market to meet various requirements and applications. If you have any problems in abrasive selection, one of our representatives will be glad to help you make the selection best suited for your needs. The following table lists various shot and grit sizes and their applications.

STEEL ABRASIVES SIZES AND GENERAL APPLICATIONS

Shot Size	Corresponding Grit Size	Approx Size of Abrasive	Shot Finish Produced	Grit Finish	General Application
(None) (None)	G-200 G-120	.002" .004"		Very light, etch-matte or satin finish	Blasting of small and nonferrous work and machined parts. Removal of very light scale. Removal of light rust.
S-70 S-110 S-170	G-80 G-50 G-40	.007" .011" .017"	Fine, smooth shot finish	Medium etch	Blasting relatively small ferrous and nonferrous castings. Removal of light scale from forgings and heat treated parts. Blasting of machined parts. Removal of mill scale, rust and other deposits.
S-230 S-280 S-330	G-25	.023" .023" .033"	Medium light, Good coverage	Sharp etch	Blasting of grey iron, mall iron, light steel castings, medium forgings heat treated parts and heavy mill scale, rust and other deposits.
S-390 S-460 S-550	G-18 G-16 G-14	.039" .046" .055"	Average to heavy shot finish - Average to poor coverage	Deep etch, rough	Blasting of steel, heavy mall, and gray iron castings. Removal of scale from large forgings, steel plate, large billets and slabs. Removal of rust and other deposits.
S-660 S-780	G-12 G-10	.066" .078"	Rough or poor coverage	Very rough	Heavy steel castings. Removal of tough heavy steel.

SECTION 5 - ELECTRICAL SYSTEM AND OPERATING PROCEDURES

BUTTON/SWITCH DESCRIPTIONS

1. EMERGENCY STOP - Stops the entire system.
2. DUST COLLECTOR START- Starts the dust collector.
3. ELEVATOR START - Starts the abrasive recycling system.
4. ELEVATOR STOP - Stops the abrasive recycling system.
5. SPINNER START - Starts the spinner drive.
6. SPINNER STOP - Stops the RT - Starts the dust collector. spinner drive.
7. BLAST WHEEL #1 START - Starts blast wheel #1.
8. BLAST WHEEL #2 START - Starts blast wheel #2.
9. BLAST WHEEL STOP - Stops both blast wheels.
10. ABRASIVE ON/OFF - To blast parts set to "ABRASIVE ON". To index parts through the blast chamber without blasting them set to "ABRASIVE OFF".
11. CHAMBER INDEX - Starts rotation of the chamber until all chambers are advanced forward one position. The previous blast sequence must have finished.
12. CYCLE OVERRIDE - Starts rotation of the chambers forward for as long as the button is pressed. This will interrupt a current blast sequence.
13. CHAMBER ON/OFF - Allows the chamber rotation to be stopped during a cycle.

OPERATING PROCEDURES

NOTE: Operator should wear eye protection during operation of this equipment.

1. Press "Dust Collector Start" button to start the dust collector.

2. Press "Elevator Start" button to start the abrasive recycling system.

3. Press "Spinner Start" button to start the spinner drive.

4. Select "Chamber On".

5. Select "Abrasive On".

6. Load chamber with parts.

7. One or both of the blast wheels may be used for blasting depending on the parts and cleaning that is desired. To stop a blast wheel, press the "Blast Wheel Stop" button and any wheels that were left on from previous cycles will be stopped. Press the blast wheel start buttons for those wheels to be used.

8. Set blast cycle timer to desired blast time.

9. Press "Chamber Index" button to start the blast cycle.

10. Parts may be unloaded and loaded to the next chamber when it comes to the loading station. The chamber will rotate short distances as the blast cycle advances through the blast positions.

11. After the blast cycle timer times out at the last blasting position the chamber will advance a short distance then the abrasive and chamber will stop.

12. Repeat steps 8 through 11 for remaining blast cycles. Allow abrasive reclaim to run between cycles to refill the abrasive hopper for next blast cycle.

13. Before shutting down the machine allow the abrasive reclaim and optional dust collector to run for 1-2 minutes to refill the abrasive storage hopper.

14. To shut down the machine press "Emergency Stop" button.

ELECTRICAL COMPONENTS
(8100688-001)

Part Number	Qty	Description
8000323	1	Actuator
6001171	8	Adapter fitting
8000970	2	Amp meter 0-30
8001343	2	Aux contact block
8001342	2	Aux contact block
8002808	1	Disconnect 100A
8001902	1	Fuse block BC6032B CL CC 2PH
8002014	2	Fuse CC 2-1/2
8002013	1	Fuse clip
8002780	1	Hour meter
8000121	1	Limit switch
8001348	1	Limit switch
8001211	2	Muffler Air
8001344	2	Overload relay
8001346	1	Overload top wiring kit
8001354	2	Pilot light
8000729	2	Proximity switch
8000111	5	Pushbutton - Flush black NO
8000112	1	Pushbutton - Flush yellow NO
8000391	1	Pushbutton - Mush green NO
8000110	2	Pushbutton - Mush red 1-NC
8000113	3	Pushbutton - Raised red NO
8000972	2	Relay 8 Pin
8000196	4	Relay Socket 8 Pin
8103268	1	Schematic
8000118	2	Selector switch 2-Pos
8001285	2	Starter, size 00
8000108	4	Starter, size 1
8001959	1-1/2	Terminal channel
8001960	6	Terminal end anchor
8001958	3	Terminal end barrier
8001961	40	Terminal section
8000329	1	Timer
8002027	1	Transform control .250 KVA
8002000-006	1	Valve

* REPLACEMENT PARTS LIST IS SUBJECT TO CHANGE WITHOUT NOTICE.

SECTION 6 - GENERAL MAINTENANCE

ELECTRIC MOTOR MAINTENANCE

In the lubrication of shot blast equipment the problem of contamination is forever present and must always be considered as a prime factor of motor bearing failure. Keep motors free of oil, dust, dirt, water and chemicals as much as possible. On non-explosive TEFC motors, a removable plug in the bottom center of the motor frame permits removal of any accumulated moisture. Always keep your lubricant free from abrasive and dust. Grease fittings and plugs and the area around them, must be thoroughly cleaned before the pressure grease gun is applied. The grease gun itself should be kept clean and its nozzle free from abrasive dust and grit.

Although motors are ruggedly constructed, they should be handled with care. Dropping or jarring a motor can seriously damage its bearings. When lifting, use a device with a capacity to handle the motor. Any motor inspections, repairs, or replacements should be handled by qualified service or maintenance personnel.

The greatest cause of motor bearing failure is over greasing rather than under greasing. Electric motors are basically dependable and require little maintenance. Too much attention may be worse than none. Motor bearings are packed with grease by the manufacturer and should operate at least one year without needing lubrication, however, should re-lubrication become necessary the grease most commonly used by motor manufacturers are:

Robalube	Continental Oil Co.
Ayprina #3	Shell Oil Co.
BRB Lifetime	Soncony Vacuum
Andok "C"	Std. Oil of New Jersey
Regal	Texas Co.

Motor bearings should be lubricated using the following procedure:

1) Disconnect machine from all power sources.
2) Thoroughly clean off and remove pipe plugs from bearing housing.
3) Remove hardened grease from drains with a stiff wire or rod.
4) Add grease to inlet with hand gun until a small amount of new grease is forced out of the drain.
5) Remove excess grease from ports and replace inlet plugs. Allow motor to drain an adequate amount of time before replacing drain plug.
6) Motor may now be put back into full operation.

Do not lubricate the motor while in operation or excess grease could be forced into the motor. Excess grease accumulation reduces insulation life.

Longer motor bearing life is assured by proper alignment, proper belt and chain tension and proper lubrication. Please follow all instructions given in this manual when attempting any replacements or repairs.

High external thrust from the driven unit is usually carried by the top bearing or thrust bearing. If replacement of the thrust bearing becomes necessary, the new bearing must be the same type and mounted in an identical manner. When angular contact type bearings are replaced, the new bearing must have the same thrust capacity.

Aside from a thorough maintenance program, one of the best ways to guarantee economical performance and long motor life is to make sure your motors operate at nameplate voltage. In the case of a T-frame motor, applying too high a voltage will reduce the motor efficiency. Too high a voltage will also lower the power factor of any motor increasing power consumption, utility bills and core loss. Core loss shortens motor life by overheating the insulation system.

Low voltage can also shorten motor life. When a voltage is used that is below nameplate recommendations, the effective horsepower of the motor is reduced. If, for example, a 5 HP motor is operated at 10% below rated voltage it becomes for all purposes a 4 HP motor. The motor, however, will try to drive the load it was intended to drive and become overloaded resulting in premature failure.

Operating voltages that are too high or too low can cause problems for motors of all kinds, but operating a three-phase motor on an unbalanced or open-delta distribution system can also cause serious overheating that will shorten motor life dramatically. A motor operating with a 3.5% voltage unbalance, for example, will experience a temperature rise of approximately 25%. Under normal conditions a totally enclosed fan-cooled T-frame motor has a temperature rise of about 75□C (167□F). An increase of 25% in this case would add about 19□C (66□F) to the motor operating temperature. The rule of thumb for motor life is that for each 10□C (50□F) rise in temperature above the rated temperature, the life of the motor is reduced one half. An increase of 19□C would reduce the motor life to about one fourth of normal wear.

In deciding whether to repair or replace an electric motor several factors should be considered. Motors with unusual electrical or mechanical features are usually more expensive and may not always be readily available. Therefore, it is frequently faster and more economical to repair these motors.

Because of differences in frame designs, modifications may have to be made when replacing some standard motors. In some cases an adapter may be necessary. Depending on the motor and cause of failure, the spiraling repair costs on parts and service could far outweigh the expense of replacement. A discussion about the motor in

question with a qualified electrician or your local electrical repair center can help you determine whether repair or replacement would be most economical for you.

GEAR REDUCERS

All Goff equipment uses high quality worm gear speed reducers. The lubricant should be changed after the first 100 hours of operation. Drain out initial oil and flush out the gear case with an approved non-flammable, non-toxic solvent and refill. Thereafter, oil should be changed at least every 2500 operating hours or once a year whichever comes first. If unit is operating in extremely dirty or high/low temperature environments, change oil more often. A high grade, mineral base worm gear oil is recommended for lubrication. An approved list for worm gear speed reducers is shown below:

Texaco	Meropa #3
Texaco	650 Cylinder Oil
American	196L Cylinder Oil
Gulf	Senate 186
Humble	Cylesso TK-190
Shell	Valvata J82
Mobil	Super Cylinder 600W
Chevron	Gear Comp. 240
Std. of Indiana	Calumet SH Cylinder Oil
Std. of Ohio	Sohicyl 650

Keep shafts and vent plug clean to prevent foreign particles from entering the seals or the gear case. Inspect periodically for oil leaks. Check couplings, set screws and reducer mounting bolts for tightness (loose fasteners can cause alignment problems and excessive wear). Check the end play in shafts. Noticeable movement might indicate service or part replacement is necessary. A high grade, 10-W-40 motor oil is recommended for the elevator drive torque arm reducer.

SCREEN SYSTEMS

The abrasive undergoes a screening process to remove any objects or tramp metal that might have been mixed into it during the blasting operation. The screen system permits the abrasive to pass but removes trash and tramp material from the system. If trash and tramp material were to pass through the blast wheel severe damage could occur to the blast wheels. The primary screen, located immediately under the blast chamber,

stops any large objects from getting into the screw conveyors and/or elevator section. This screen is accessible through the access door. The operator should inspect the screen regularly and remove any accumulation. A clogging up of foreign material at this primary screen could disrupt or obstruct the cycle of abrasive flow to the storage hopper. It may be necessary to use a rake type tool when cleaning primary screen to insure access to the full screen length.

Very few Goff machines do not have an abrasive separator. These machines only have a primary screen that is under the blast chamber. However, most Goff machines have an abrasive separator. These machines have different screen systems in the abrasive separator that may vary from machine to machine. Some models have a stationary screen above the separator, other models have a combination rotary screen above the separator and a stationary screen below the separator, while other machines just have a stationary screen below the separator.

STATIONARY SCREEN

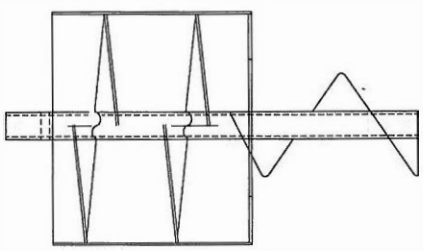

ROTARY SCREEN

M02035

NOTE: The stationary screen is made of perf plate or wire mesh. The rotary screen cage is made of wire mesh. A wire machine has a metal box for a screen.

The operator should inspect all screens in the separator regularly and remove any accumulation. To make it easier to clean the screen, some stationary screens can be easily pulled out. Always replace these screens immediately after cleaning them. <u>Never operate the machine without these stationary screens</u>.

The rotary screen, rotates in the separator section and allows abrasive to fall through while large objects are trapped. These trapped objects are then ejected from the

system through the refuse spout. The rotary screen should be checked periodically for accumulation and cleaned if necessary.

The long refuse spout is for discharge of trapped objects in the rotary screen. The short refuse spout is for discharge of dirt and contaminates removed from the abrasive during air wash separation. Both refuse spouts should be inspected periodically for accumulation and cleaned if necessary.

CHAMBERS

There are a variety of chambers that Goff uses in its machines.

Spinner Hanger Machines have a chamber drum that is divided into 2 or 3 equal sections. The chamber drum is driven by an electric motor and reducer situated on top of the chamber. This configuration allows the operator to unload and load one section of the drum while the other section(s) with parts are being blasted with abrasive. While being blasted, parts are spun in a circle in each section while resting on spinning hanger fixtures.

Table Blast Machines have only one chamber. This chamber has a table that spins around while the parts are being blasted with abrasive. Most tables are driven by an electric motor and reducer situated under that table and chambers, others are driven by a wheel that is attached to an electric motor and reducer. The wheel drives on the side of the table while the electric and reducer operates from the outside rear of the chamber.

Barrel Blast and Tumblers have a mill belt that tumbles the parts in the chamber. The mill belt forms a pocket in the chamber. The ends of this pocket are blocked off with barrel head liners as shown below.

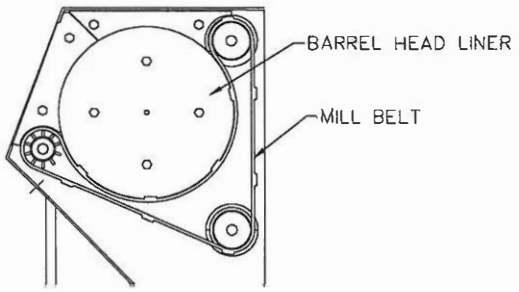

M02039

Rod and Pipe Cleaner, Block Cleaners and Wire Mesh Machines major function is to allow parts to enter one end of the machine and exit the other end. While parts are in the machine, they are blasted with abrasive. These machines allow continuous blasting of parts without stopping the machine to unload and load parts. Rod and pipe cleaners use roller conveyors to move parts. Block cleaners and wire mesh machines use a belt conveyor to move parts.

Liners (optional) are put into the machines to increase the life of the chamber walls. Not every Goff machine has liners. Goff liners come in different varieties. Some Goff machines will have more than one type of liner. These varieties include cast alloy liners, plate liners, hanging liners, table liners, barrel head liners, and abrasive resistant rubber. Liner position and size were designed for ease of maintenance and replacement. When liners get worn to half their original thickness or severe wear holes develop they should be replaced. <u>If liners are allowed to wear through, damage could occur to internal chamber components.</u>

Note: All cast alloy liners and some plate liners are fastened to the wall and/or ceiling of the chamber with cast nuts. Barrel head liners are fastened with counter-sunk bolts to the barrel head. Abrasive resistant rubber is held in place with bar retainers and nuts. Some abrasive resistant rubber is held in place with cast nuts. All fasteners should be replaced when worn severely. Always check the fasteners for wear and replacement when replacing liners. Some liners rest on the bottom of the chamber or on top of a table. These liners do not use fasteners.

ROLLER CHAIN DRIVES

Normal chain wear is caused by a joining of the pins in the bushings. In a properly lubricated chain drive, separating film of fluid lubricant is formed in the operating chain joints. Without adequate lubrication wear in the chain joints is usually the limiting factor in the life of the chain. Such wear results in increased chain pitch. This increase in pitch allows the chain to ride out on the sprocket teeth. When excessive stretching occurs the chain must be replaced before it overrides the sprocket teeth.

Proper lubrication of the bearing surfaces of the chain is of major importance in retarding wear. Installation of a new chain or badly worn sprockets will result in excessive chain wear and serious shortening of the life of the drive.

Careful and accurate installation is essential for trouble free operation. Before installing sprockets, the shafts should be checked to make sure that they are parallel and level. Alignment after mounting can be checked with a string or straight-edge held against the sides of the sprocket face. Sprockets should be located as close to the shaft bearing as possible. Shafting and motors should be installed as rigidly as possible in order to avoid vibration. Keyways and set screws should be checked for tightness. When installing replacement chains, always check sprockets for excessive wear and replace if necessary.

The life of a roller chain is usually limited by pitch elongation, or stretching, due to wear of the load carrying joints. This finally results in failure of the chain to mesh with the sprocket teeth.

Premature chain failure may be caused by excessive wear due to lack of lubrication. This allows entrance of abrasive matter into the chain joints causing corrosion. Chains must be properly lubricated for the existing conditions of load and speed.

Chain drives should be protected against dirt and moisture and the oil supply kept free of contamination. A fluid lubricant must be applied to assure an oil supply to the joints and minimize metal-to-metal contact. Periodic cleaning and oil change is recommended. A good grade of a petroleum based oil is recommended. Heavy oils and greases are generally too stiff to enter and fill the chain joints. Below are the recommended lubrication viscosity for various surrounding temperatures.

Temperature Degrees F	Recommended Lubricant
20-40	SAE 20
40-100	SAE 30
100-120	SAE 40
120-140	SAE 50

Chain life can vary depending upon the way the drive is lubricated. The better the lubrication, the longer the chain life. At slow speeds good results are obtained by an oil of medium consistency applied with a brush while the chain is running slowly.

AIR CYLINDERS

The most common use for an air cylinder on a Goff machine is on the abrasive valve assembly. Most machines use them on their door locking mechanism. If a significant decrease in air pressure is noted or full cylinder extension is not being achieved, the cylinder may require replacement. A decrease in air pressure could also indicate a faulty valve or air line connection. Air cylinders and lines should be inspected periodically for proper operation. Check the air line for leaks and repair or replace if necessary.

PULLEYS, SHEAVES, and HDT SPROCKETS

Goff machines will have either a v-belt or flat belt drive elevator belt. Check your machine to see which belt drive you have before reading the rest of this section.

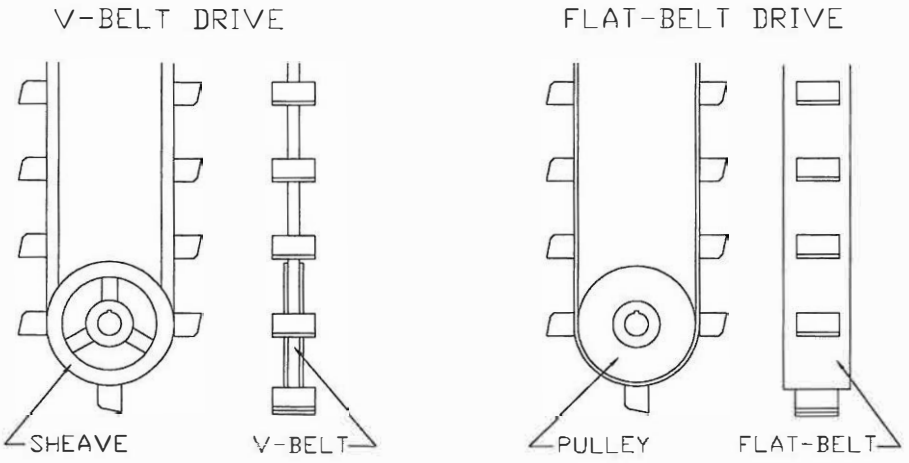

M02034

Pulleys/sheaves are a slow wear item so only periodic inspection will be necessary. When the pulley/sheave becomes worn down to 20% of its pitch diameter or outer diameter, the pulley/sheave must be replaced. When the spokes become worn into or broken, the pulley/sheave must be replaced. To replace pulleys/sheaves, release belt or

chain tension by loosening the torque arm on the reducer, loosen set screws on shaft bearings and slide pulley/sheave off shaft.

Spinner hangers use a variety of sheaves to drive the chamber drum and the chamber spinner hangers. Roller conveyors use sheaves to drive rollers. They should be periodically inspected.

Some spinner hangers use HTD sprockets and a HTD rubber belt to drive the chamber drum. Inspect these sprockets periodically and replace if the teeth are worn, chipped or cracked.

Always release the belt tension on any belt drive system before removing pulleys, sheaves, or sprockets.

BELT DRIVE for SPINNER HANGERS and CONVEYORS

The proper alignment of the drive must be checked and maintained at all times. If the drive is misaligned, the belts will rub on the sheaves/HTD sprockets causing reduced belt and sheave/HTD sprocket life. Keep sheaves/HTD sprockets and belt free from dirt, oil and grease. Rust nicks and burrs should be removed from the sheave/HTD sprocket grooves and worn sheaves/HTD sprockets should be replaced. The locking devices on the sheaves/HTD sprockets should be checked to assure and maintain proper tightness on the shaft. Vibration or improper alignment could cause set screws, taperlock bushings or locking caps to become loose. They should be checked and tightened periodically.

Urethane belts are orange and round. They drive the spinner hanger mechanism above the chamber. If conveyor is roller driven then each roller is driven by a urethane belt. Replace belts when worn or cracked. Always release the belt tension before removing the belt.

HTD rubber belts are usually on Goff's heave spinner hanger machines. An HTD rubber belt drives the chamber drum. Both urethane and HTD belts will be used on heavy spinner hangers. Replace HTD rubber belts when the teeth are worn, chipped, or cracked. Always release the belt tension before removing the belt.

V-belts are used on older model heavy spinner hangers. The proper installation procedures, alignment, inspection and general maintenance of these drives are vitally important to efficient performance of the machine.

Always use matched belts. V-belts are manufactured either by molding or are cut to specified shape. The cross-sectional dimensions of v-belts made by various manufacturers are not always identical, some belts may be slightly wider, some thinner or the angle of the belt sides may be different. Make sure that all the belts on one drive are from the same manufacturer and that they are properly matched. Never match used belts with new ones. Belts which are improperly matched could cause a reduction in the efficiency of the v-belt drive.

Always use matched sheaves. A sheave with an improper diameter for the belt being used will cause a significant reduction in belt life.

When replacing v-belts it should not be necessary to pry or lever them into or out of the sheave grooves. If excessive force is used to pry v-belt internal breakdown may occur. To properly install or remove v-belts release pressure on the air cylinder or release tension on the drive chain. This should allow the belt to be easily removed.

Always use a full set of v-belts. The efficiency and durability of a multiple v-belt drive can only be assured if the drive is operated with a full set of belts as originally designed. Operating a drive with less than a full set of v-belts results not only in loss of efficiency but also causes an overload on the belts, shortening belt life.

Proper v-belt tension is important. If a drive is set up with the v-belts too tight, it will force the belts to pull an unnecessary load which may cause overheating of the bearings. If the drive is too loose, the belt may slip causing a drop in efficiency as well as causing undue wear on the belts and sheaves. A v-belt drive is properly tightened when a slight bow is noted on the slack side of the belt while it is running.

Avoid contact with oil, grease and acid. Oil and grease will cause swelling of the v-belts and can result in premature failure. Do not be careless during lubrication. Acids will greatly reduce belt life and hence all contact with acid should be avoided. Never use belt dressing on a v-belt drive.

ROLLERS

Rollers are a slow wear item so only periodic inspection will be necessary. When a roller's shell becomes worn down to 20% of its shell thickness, the roller must be replaced. If the roller will not freely roll, inspect and replace if necessary.

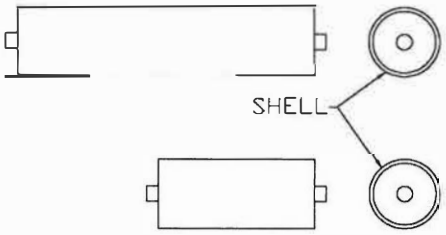

M02037

SECTION 7 - SAFETY AND PREVENTIVE MAINTENANCE

PREVENTIVE MAINTENANCE

Routine inspection is the key to preventive maintenance. This assures that needed repairs are discovered while they are still minor. Here is a suggested maintenance check list:

PREVENTIVE MAINTENANCE CHECK LIST

ITEM	AFTER 1st 10 HOURS OF OPERATION	DAILY	WEEKLY	MONTHLY	YEARLY
Set screws - Tighten	✔				
Blast Wheel Liners				✔	
Blast Wheel Blades			✔		
Blast Wheel Control Cage				✔	
Blast Wheel Impeller				✔	
Blast Pattern			✔		
Fans & Motors				✔	
Screens - Hopper		✔			
Screens - Cabinet		✔			
Gear/Drives/Reducers/Chain/Belts				✔	
Check & Empty Separator Refuse		✔			
Elevator-Sheaves-Belts-Bearings				✔	
Electrical Components					✔
*Dust Collector Check & Empty Hopper/Refuse Drum		✔			
*Table Liners-Alloy or Neoprene		✔			
*Cabinet Liners-Cast,Alloy,or Neo.		✔			
*Mill Tumble Belt		✔			
*Air Dryer		✔			
*Air Oiler		✔			
*Belt Conveyor - Belt adjustment		✔			
*Hydraulics			✔		
*Nozzles		✔			

* WHEN APPLICABLE

SUGGESTED MAINTENANCE SCHEDULE

1. **Blast Wheel Wear Parts** - Inspect Daily
   Replace when wear parts are deeply grooved or worn to half original thickness.

2. **Blast Wheel** - Balance & Noise - Daily
   Testing for balance is done by running the blast wheel with the blades in position and then without blades. A vibrating wheel indicates improper balance or possible motor failure.

3. **Blast Pattern** - Weekly
   If improperly directed the blast pattern will cause an increase in blast time as well as abnormal wear on the equipment. The blast pattern should always be checked after blade replacement or any change in abrasive being used.

4. **Fans & Motors** - Monthly
   Check for proper rotation. Improper rotation could cause a loss in power or severe damage to motor or machine. Keep motors free of oil, dust, dirt, water and chemicals as much as possible. Inspect motor bearings and lubricate when necessary. BE CAREFUL NOT TO OVER LUBRICATE. The greatest cause of motor bearing failure is over greasing not under greasing.

5. **Screens** - Daily
   A hole in the abrasive screen could allow large materials to re-circulate and reach the blast wheel causing severe damage.

6. **Roller Chain and Sprockets** - Inspect Monthly
   Maintain light film of oil - Replace when stretched beyond "take-up". Replace sprockets when teeth are worn.

7. **Separator Air Flow** - Daily
   This is done by inspecting the abrasive. If it is dirty or dusty, increase the air. Dirt and dust allowed to build up in the abrasive will use up power in the blast wheel causing a decrease in cleaning quality.

8. **Elevator Belts, Buckets and Pulleys** - Inspect Weekly
   Replace belts when worn and/or frayed or when stretched to point where belt will not "take-up" or will not track.
   Replace buckets when cracked or worn where 60% capacity cannot be held. Replace pulleys when lagging is worn

9. **Dust Collector** - Daily
   Inspect fan, blower, duct work, housing and filters. Improper operation of the dust collector causes a build up of dust on the working parts of the machine and causes work environment hazards. Refuse from the dust collector should be inspected daily for any traces of good usable abrasive. The dust collector should keep machine dustless but should not draw out any usable abrasives.

10. **Gear Reducers** - Inspect Monthly
Replace gear oil every 2500 hours or annually.
Check the manufactures's nameplate attached to each reducer for the correct lubricant to use. Check for oil leaks. Check for end play in shafts and all bolts retaining hardware. Noticeable movement might indicate service or part replacement is necessary.

11. **Bearing** - Inspect Every Six Months
Bearings are lubed for life. Excess lubricant can cause abrasive contamination in the bearing and result in premature bearing failure.

12. **Electric Motors** - Inspect Monthly
Small amount of oil occasionally. Excess lubricant can cause abrasive contamination in the bearing and result in premature bearing failure.

13. **Hydraulics** - Weekly
Inspect filter and replace when necessary. Check and replace fluid annually or as conditions warrant. Keep area as clean as possible.

14. **Pneumatic Components** - Monthly
Air cylinders and lines should be checked for proper operation and wear and leaks.

15. **Cabinet and Barrel Head Liner** - Inspect Daily
Replace when worn to half original thickness.

16. **Mill Belt** - Inspect Daily
Replace when worn and/ or frayed or when stretched to point where belt will not track.

17. **Nozzles** - Inspect Daily
Since abrasive passes through the nozzle's orifice, the orifice will over time become larger. If you notice an increase in cleaning time replace the nozzle.

18. **Belt Conveyor**
The abrasive return belt serves to transport the abrasive and sand mix to the abrasive screen conveyor.

Adjusting the belt tracking

In the first operating phase of belt conveyors, care must be taken that the belt tracking is perfect even under varying operating conditions. Incorrect belt tracking will invariably cause major damage.

To adjust the tracking and the tension of the belt, tensioning spindles are provided on the tensioning station.

- By tightening the right tensioning spindle (seen in the direction of the belt travel), the belt will swerve to the **left**.

- By tightening the left tensioning spindle, the belt will swerve to the **right**.

If the belt tracking is perfect when the belt is unloaded, but the belt swerves to the left when loaded (seen in the direction of the belt travel), the support rollers have to be adjusted as follows:

- adjust the support rollers on the **left** - **in** the direction of the belt travel.

- Adjust the support rollers on the **right** - in the **opposite** direction of the belt travel.

If the belt swerves to the right proceed the same way - but reverse the procedure.

The brackets of the support rollers have oblong holes.

When the belt is replaced, the belt tracking must be completely readjusted.

The support rollers and the deflection pulleys are provided with greased-for-life roller bearings.

Belt Conveyor Maintenance - Everyday:

Check belt tracking.

In the first operating phase you must check the belt once a day for straight tracking. Incorrect belt tracking increases wear and causes damage to the belt conveyor.

After every 160 operating hours:

Check belt tracking.

Check the support rollers and deflection pulleys for ease of operation.

Check the wipers for wear.

The wipers are equipped with adjustable rubber lips which must have full contact with the belt. Do not allow any abrasive to drop on the floor.

After every 500 operating hours:

Lubricate the bearings on the drive drum and on the tensioning drum. Lubricate the tensioning spindles with dry lubricant.

After every 10,000 operating hours:

Clean the bearings and change lubricant in the geared motor according to manufacturer's specifications.

Consult your maintenance and operating manual before making any repairs to your equipment.

SAFETY

There are several advantages to an effective safety program which include: lower operating costs, lower worker compensation, less work time lost, high employee moral and less problems. No one can work safely without knowing what precautions one must take to ensure one's personal safety. One must know what safety equipment to wear, which job practices are safe and which are not, and one must be aware of what hazards are possible in one's work area. A regular schedule of preventive maintenance on your equipment is the best protection against unpleasant surprises that slow production and can sometimes result in injuries.

The blast cleaning system has been built in accordance with state-of-the-art standards. Nevertheless, there can be hazards inherent in the blast cleaning system if it is used in an improper way or for inappropriate purposes or if it is operated by non-trained personnel.

To achieve maximum operating safety, the personnel mentioned below must have carefully read this **"Safety Section"** supplied by:

- the plant management
- the supervisors of the blast cleaning system
- the operating, maintenance and repair personnel.

Make sure this manual is

- kept in a place close to the blast cleaning system
- always available
- complete and in good condition

as this manual is an essential part of the protection system.

No responsibility can be assumed for damage caused by non-observance of the instructions given in these manuals.

The blast cleaning system must be operated and serviced by trained operating and maintenance personnel only. Work on the electrical system must be carried out by skilled electricians. The fields of responsibility of the personnel must clearly be defined. This lies within the responsibility of the plant management.

IMPORTANT
Never operate the blast cleaning system without a complete and properly functioning protection system.

Therefore, it is absolutely necessary to inspect the protection system regularly.

If, in this manual, components of the blast cleaning system are shown without protective devices, this is only done to be more illustrative. The illustrations in this manual are schematic diagrams.

Should any defects within the protection system occur, eliminate them immediately and report them to the supervisors or to the plant manager.

Before adjusting, servicing or repairing the blast cleaning system, you must follow the shut-off procedures explained in the Operating Instructions and put the blast cleaning system into **"lock out/tag out"**.

You can find an exact description of this "lock out/tag out" and how to attain it in this section.

Upon adjusting, servicing or repairing the blast cleaning system, check that all components
of the protection system are installed and operate properly.

CAUTION

Always keep a fire extinguisher on hand when performing cutting, grinding or welding work.

Always keep the dust collector **switched off** while cutting, grinding or welding within the blast cleaning system.

WARNING!

Modifications and constructional changes on the blast cleaning system without consulting us can cause impairment of the operational safety and are therefore not allowed.

A clean work environment and the observance of safety instructions and regulations help prevent accidents and increase the efficiency of the blast cleaning system.

Make sure that the safety instructions in this manual and the local accident prevention regulations are observed.

SAFETY

RECOGNIZE SAFETY INFORMATION

This is the safety-alert symbol.

When you see this symbol, become alert!

Your safety is involved.

UNDERSTAND SIGNAL WORDS

A signal word - DANGER, WARNING or CAUTION is usually near specific hazards.

DANGER - Indicates an imminently hazardous situation which, if not avoided, will result in death or serious injury.

WARNING - Indicates a potentially hazardous situation which, if not avoided, could result in death or serious injury.

CAUTION - Indicates a potentially hazardous situation which, if not avoided, may result in minor or moderate injury. It may also be used to alert against unsafe practices.

SAFETY INSTRUCTIONS – Instructions on proper safety procedures of the blast machine.

READ OPERATING INSTRUCTIONS AND WARNING SIGNS CAREFULLY

Read all warning messages in this manual and warning signs on your machine.

Keep warning signs in good condition. Replace missing or unreadable warning signs.

LEARN MACHINE SAFETY

Carefully read this manual. Learn how to operate blast machine and how to use controls properly.

Do not let anyone operate the blast machine without proper instruction. New operators require special training before they begin working on the blast machine.

Unauthorized modifications to the blast machine will impair the function and/or safety and affect machine life.

INSPECT MACHINE

Inspect your machine carefully each day before you start it. See Pre-Start Inspection section in this manual.

OPERATE MACHINE SAFELY

Persons not trained to operate or repair the blast machine should not be in the area of operation and machine movement.

DANGER!

Only one person must use the control panel for most operations. That one operator must walk completely around the machine to make sure no persons are near the machine before starting the machine. If the machine stops, determine why it stops and when it will restart before resetting machine and continuing the operation.

PREPARE FOR EMERGENCIES

Be prepared if a fire starts.

Keep first aid kit and fire extinguisher handy.

Keep emergency number for doctors, ambulance service, hospital, and fire department near your telephone.

WEAR PROTECTIVE CLOTHING

Always wear fairly tight clothing and proper safety equipment.

AVOID HIGH-PRESSURE FLUIDS

Escaping fluid under pressure can penetrate the skin causing serious injury. Put blast machine into ZMS® to relieve pressure before disconnecting hydraulic or other lines. Tighten all connections before applying pressure. Keep hands and body away from pinholes and connections which eject fluids under high pressure. Use a piece of cardboard to search for leaks.

If ANY fluid is injected into the skin, see a doctor immediately.

SERVICE MACHINE SAFELY

Never operate the machine if an unsafe condition exists.

Be sure you understand the service procedure before working on the machine.

Put blast machine in Zero Mechanical State (ZMS®) before doing maintenance. See Putting Blast Machine in (ZMS®) in this manual.

DANGER!

WHEN USING TWO PEOPLE to make checks with the machine running - the operator at the controls must be able to see the person doing the checking.

DANGER!

DO NOT ever climb into machine when machine is not in ZMS®.

CLEAN THE MACHINE AND FLOOR REGULARLY

Remove any grease, oil, shot, sand or dirt build-up to avoid possible injury or machine damage. Remove shot beads from floor daily, or more frequently, if required.

PROTECTION SYSTEM

Please read this operation manual before operating, testing and maintaining the protection system.

The protection system includes this manual, guards, protective circuits, emergency stop buttons, warning signs and machine colors. Hazardous areas are marked with warning signs.

The service access door and emergency stop protective circuits must be inspected and tested at the beginning of each shift. **DO NOT** use protective circuits as control devices.

DANGER!

Never operate the blast machine without the protection system operating correctly and guard in place or severe injury may result.

DANGER!

Do not rely only on protective circuits during service and repair. Put blast machine into Zero Mechanical States (ZMS®)

GUARDS

During operation, maintenance access panels, guard gates and guard fences must be in place and securely closed.

Put machine in ZMS® before doing maintenance. If guards are missing, contact Disa Goff., Inc.

PROTECTIVE CIRCUITS

The maintenance access door, located on the rear of the cabinet is equipped with an electrical protective device.

When the operator opens this door, the protective circuit will not allow the blast machine to start or stops the cycle of the blast machine immediately. In order to start the machine, the maintenance access door must be closed and the operator must "report" that he is now outside the door clearing the alarm on the panelview.

If a protective guard has an interlock that interrupts the automatic cycle, it then comes under the definition of an "Interlocked Barrier Guard", and the operator "...SHALL INSPECT THE INTERLOCK AT THE BEGINNING OF EACH SHIFT OF OPERATION AND IMMEDIATELY REPORT ANY DAMAGE OR MALFUNCTION OF THE DEVICE TO HIS SUPERVISOR" (See ANSI Z241.3, para 5.2.1.4)

DANGER!

Do not rely only on protective circuits during service and repair. Bring the blast machine into Zero Mechanical State (ZMS©).

PROTECTIVE SYSTEM COMPONENT LOCATIONS

A maintenance access door is located on the blast machine. This door must be closed to allow machine operation. The service access door and its protective circuit must be inspected and tested at the beginning of each shift.

ELECTRIC POWER TO CONTROL PANEL AND BLAST CLEANING MACHINE

Lock switch in the off position with padlock when it is necessary to enter machine.

MAIN AIR SUPPLY

Main air supply valve is located on the back of the cabinet. Pull valve handle to shut air off. Lock valve in off (closed) position when it is necessary to enter machine for maintenance or troubleshooting.

SLACKLINE MONITOR

Monitors skip bucket hoist. If cable is slack or breaks, drum will not operate.

FLASHING LAMP

Amber light on top of control cabinet lights when machine power is turned on, when emergency stop button is pushed or machine malfunctions.

HORN ALARM

Audible alarm that sounds, when machine starts, to alert personnel in the area.

EMERGENCY STOP BUTTONS

Pushing an emergency stop button stops all machine movements.

INSTRUCTIONS FOR WELDING AND CUTTING WORK ON DESCALING MACHINES AND BLAST CLEANING SYSTEMS FOR ALUMINUM WORK PIECES

Descaling machines and blast cleaning systems for aluminum work pieces always involve an increased risk of fire and explosion.

The plant management has the obligation to make the maintenance and service personnel aware of these dangers and to point out the hazards of fire and explosion posed by mixtures of dust and air generated inside the blast cleaning cabin, the filters and the piping and tubing system.

Before starting any welding work, it is absolutely necessary to **thoroughly** dedust the blast cleaning system. Always keep the cabinet doors **open** and the dust collector **switched off** during ongoing welding work.

Also proceed with great caution when carrying out welding or cutting work on the exterior of the cabinet walls.

Always keep fire extinguishers on hand when carrying out welding or cutting work.

SAFETY TIPS

1. The first step before any maintenance or inspection takes place should be to disconnect the power. This includes removing all electric, pneumatic and hydraulic power sources. **Then LOCK-OUT and TAG-OUT the machine.**
2. Wear proper eye protection at all times.
3. Practice good preventive maintenance.
4. Practice good housekeeping.
5. Replace worn parts when necessary.
6. Do not reach into elevator access while machine is in operation.
7. Do not attempt to open blast cabinet access doors until blast wheels have come to a complete stop.
8. Be sure all electrical inspections or changes are done by a qualified electrician.
9. Routine inspections usually require climbing onto your machine. Loose abrasive can cause dangerous footing. Be alert and careful.
10. Be sure to read this operation and maintenance manual fully and carefully before attempting any operation or repairs to this equipment.
11. Use a scoop or scraper when removing abrasive from a jammed elevator. **DO NOT USE YOUR HANDS!** If a jammed elevator belt is stretched tight, the tension in the belt will release when excess abrasive is removed causing the pulley to rotate rapidly in the reverse direction. Serious personal injury could result if a hand or forearm is in the path of the rotating buckets.
12. During an electrical power shortage or failure, disconnect the main power switch and manually operate the pneumatic solenoid valve to close the abrasive flow.
13. An adequate dust collection system should be used to insure a safe working environment.
14. After replacing parts, make sure all the tools used are removed from the machine. Be sure all bolts and nuts are tightened. The loose connection of a rotating part could cause the part to fly off with explosive force causing serious damage to machine and injury to the operator.
15. If the system should malfunction during cycle immediately depress the emergency stop.

LOCK-OUT/TAG-OUT

As described in the Safety Manual, the lock-out/tag-out is to prevent unexpected movement of parts of the blast cleaning system and thus to provide maximal protection during maintenance and repair work.

If protective devices are removed or work is carried out on the blast cleaning system without protective devices, the blast cleaning system must be in lock-out/tag-out.

IMPORTANT

Although lock-out/tag-out has been established, you must still be very careful when working on the blast cleaning system.

While the blast cleaning system is in lock-out/tag-out, personal safety tags and padlocks must be attached to the following locations:

- on the blast cleaning system
  - personal safety tags stating that work on the blast cleaning system is in progress
- on the three-way tap of the pneumatic and hydraulic systems and the electric main switch
  - personal safety tags stating that these components must not be operated
- on the three-way tap of the pneumatic and hydraulic systems and the electric main switch
  - personal padlocks to lock these components in closed/off position

IMPORTANT

Always respect other people's safety tags and padlocks.

PUTTING THE BLAST CLEANING SYSTEM INTO LOCK-OUT/TAG-OUT

Before performing periodic maintenance work, you must unload the blast cleaning system and stop it as described in the Operating Instructions. The cabinet door must be open and there must not be any parts inside the blast cabinet.

To prevent inadvertent movement of individual components while the blast cleaning system is in lock-out/tag-out, you will have to evacuate the abrasive from the blast cleaning system.

- Position the machine to its most neutral position.
  - For a CRD machine, position to its zero tilt position and it's drum should be its horizontal position.
  - For a loader, all hydraulic and pneumatic cylinders should be in their most compressed or relaxed states.

- Switch off the control system by pressing "Emergency Stop".
- Switch off the main voltage and secure the main switch with a personal padlock to prevent actuation by unauthorized persons.
- Close the shut-off tap on the service unit of the pneumatic system and secure it with a personal padlock. By closing the shut-off tap the pneumatic system is vented simultaneously. Disconnect pneumatic lines at quick release connections.
- Place personal warning tags on the control cabinet and on the shut-off tap of the pneumatic system stating that maintenance work is in progress.
- Close the shut-off tap on the service unit of the hydraulic system and secure it with a personal padlock. Disconnect hydraulic lines at quick release connections.
- Place personal warning tags on the control cabinet and on the shut-off tap of the hydraulic system stating that maintenance work is in progress.

The blast cleaning system is now in lock-out/tag-out.

IMPORTANT

Before starting any maintenance work, you **must** put the blast cleaning system into lock-out/tag-out and secure all movable parts carefully against inadvertent movement.

LOCK-OUT/TAG-OUT AFTER A FAULT

If the blast cleaning system stops after a fault, there might still be parts inside the blast cabinet. To move the parts out of the blast cabinet, proceed as described below:

- Switch off all drives.
- Switch off the control system by pressing "Emergency Stop".
- Switch off the main voltage and secure the main switch with a personal padlock.
- Close the shut-off tap on the service unit of the pneumatic system and secure the tap with a personal padlock. By closing the shut-off tap the pneumatic system is vented simultaneously. Disconnect pneumatic lines at the quick release connections.
- Place personal warning tags on the control cabinet and on the shut-off tap of the pneumatic system stating that maintenance work is in progress.
- Close the shut-off tap on the service unit of the hydraulic system and secure it with a personal padlock. Disconnect hydraulic lines at quick release connections.
- Place personal warning tags on the control cabinet and on the shut-off tap of the hydraulic system stating that maintenance work is in progress.
- Pull the door locks open by hand and open the door.
- Remove all parts from the blast cleaning system

Depending on the nature of the fault, it might happen that the lock-out/tag-out cannot be fully attained.

TESTING THE BLAST CLEANING SYSTEM FOR LOCK-OUT/TAG-OUT

To make sure that the blast cleaning system is in lock-out/tag-out, check the following:

1. Control system - it must not be possible to switch on the control system.
2. Pressure in the pneumatic system - the pressure gauge for compressed air must indicate **0 bar**, (0 psi).
3. Pressure in the hydraulic system - the pressure gauge for compressed fluid must indicate 0 bar (0 psi).
4. Cabinet door - the cabinet door must be open. It must be possible to move it by hand.
5. Bucket elevator - the buckets of the bucket elevator must be empty.

WARNING

Even when the blast cleaning system is in lock-out/tag-out, working on the blast cleaning system still involves certain risks.

For example, it is dangerous to remove heavy equipment components if these are not properly supported.

Any work being done on the blast cleaning system must be performed with extreme caution.

RESTARTING THE BLAST CLEANING SYSTEM AFTER LOCK-OUT/TAG-OUT

After lock-out/tag-out, you must restart the blast cleaning system as follows:

1. Check that repair or other work is completed and that nobody is within or in the immediate vicinity of the blast cleaning system.
2. Check that all tools which were used have been removed from the blast cleaning system.
3. Properly reinstall all protective devices which were removed or opened.
4. Remove the safety tag and your personal padlock from the main switch of the electric system.
5. Turn the main switch of the electric system to "on".
6. Remove the safety tag and the padlock from the shut-off tap of the pneumatic system.
7. Reconnect the pneumatic lines. Open the shut-off tap of the pneumatic system.
8. Remove the safety tag and the padlock from the shut-off tap of the hydraulic system.
9. Reconnect the hydraulic lines. Open the shut-off tap of the hydraulic system.

Now you can restart the blast cleaning system as described in the operating instructions.

IMPORTANT

If you see other workers' personal safety tags during the start-up procedure, **stop** the procedure **immediately.**

If necessary, re-establish lock-out/tag-out

TROUBLE SHOOTING

MALFUCTION	CAUSE	SUGGESTED REMEDY
	CABINET AND BLAST WHEEL	
EXCESSIVE VIBRATION	1. Unevenly worn blades	1. Replace blades with a new complete set. Check separator adjustment. Inadequate contaminant removal could cause blades to wear faster
	2. Chipped or broken blades.	2. Usually caused by abrasive rebound action. Replace blades with complete new set. If frequent chipping or breakage is noted, your abrasive mixture may be too large for your needs. A smaller size mixture could be more economical and just as effective.
	3. Improperly mounted blast wheel.	3. Blast wheel unit should not wobble or vibrate excessively. Unit should be tightened down evenly. If blast wheel unit develops severe leakage or wear holes in housing, unit may need replacement.
EXCESSIVE NOISE	1. Improper clearance between the rotating parts.	1. Check alignment and mounting of rotating parts. Parts should not be allowed to knock against each other during rotation.
	2. Abrasive size.	2. Be sure to use the abrasive mixture that best meets your needs, provides good blast coverage, quieter operation, and more efficient cleaning or shot peening.
	2. Loose bolts or set screws	3. Check base plates, motor bearings, housings and sheaves. Make certain all components are firmly secured. Check belt tension.
	4. Defective bearing.	4. Check all bearings (motor & drive), a smooth free rotation should exist. Replace worn or defective bearings. Lubricate motor bearings if necessary. **DO NOT OVER LUBRICATE**
INCREASED CLEANING TIME	1. Improper abrasive feed to blast wheel.	1. If ammeter indicates a lower ampere reading than the normal full load rating:

TROUBLE SHOOTING

MALFUCTION	CAUSE	SUGGESTED REMEDY
- reduces efficiency of equipment - denotes a malfunction which even though it permits production to continue it might eventually cause serious machine damage		a. Check storage hopper and add abrasive if level is low. b. Check abrasive for dirt or other contaminants which should have been removed by the separator. c. Check separator adjustment. d. Check feed lines for obstructions that could reduce flow through the feed spout or abrasive valve. Clean or blow out if necessary e. Check impeller for wear. Replace if necessary. f. Check motor and blast wheel rotation for proper operation. g. Make sure wheel is not overloaded with more abrasive than it can handle. Check and adjust the abrasive valve accordingly. h. Check screens for any accumulation of objects or debris that could disrupt the cycle of abrasive flow.
	2. Loss of direction control of the blast pattern. This will cause abrasive to strike sections of the blast chamber rather than the work to be blasted, increasing cleaning time, wear and maintenance.	2. Conduct an accurate blast pattern test. Check the "hot spot" location and adjust control cage accordingly. The "hot spot" should be directed onto the work to be blasted at the most beneficial angle. Inspect control cage and impeller for wear. Replace if necessary.
ABRASIVE LEAKAGE	1. Improper sealing. 2. Worn liners.	1. Maintain and replace all worn seals in the blast wheel housing and feed spout. Check chamber seals and replace if necessary. 2. Inspect liners on a daily basis and replace when necessary. If liners are allowed to become too worn abrasive wear or damage could occur to the blast wheel housing, blast chamber or blast doors allowing abrasive to leak out.

TROUBLE SHOOTING

MALFUCTION	CAUSE	SUGGESTED REMEDY
INSUFFICIENT AIR PRESSURE	1. Faulty air cylinder	1. Check and replace air cylinder if necessary.
	2. Faulty valve.	2. Check and repair or replace.
	3. Faulty air lines	3. Air hoses could become clogged causing air flow to be obstructed. Blow hoses and clean lines. Check for any leaks. Repair or replace if necessary.
VARIABLE EXPOSURE TIME AND MATERIAL FINISH	1. Worn or loose belt	1. Check belts for wear and tension. Replace if necessary.
	2. Worn sheave	2. Check sheaves and replace if necessary.
	3. Worn bearings.	3. Check bearings for wear and replace if necessary.
	4. Faulty air cylinder	4. Check air cylinder for proper operation and pressure. Replace or repair if necessary.
	ABRASIVE RECYCLING SYSTEM	
STALLED ELEVATOR	1. Clogged screens	1. Clean screens regularly. When screens become clogged abrasive backs up into the elevator causing a jammed condition. Inspect and replace screens when worn.
	2. Worn elevator buckets.	2. If buckets are worn they will no longer carry their pre-determined load. Replace buckets when necessary. If belts show considerable wear replace complete assembly.
	3. Storage hopper overflows.	3. If too much abrasive has been added to the system or an accumulation of dust and contaminants has been delivered to the storage hopper it will fill above capacity level causing abrasive material to back up and jam. Drain off excessive abrasive and check abrasive for excessive dust and dirt accumulation. If dust and dirt are present check separator for proper operations and adjustment. Storage hopper should be maintained at ¾ full.
	4. Abrasive added too fast.	4. When making abrasive additions, especially when machine is in operation, do not overload elevator by adding large quantities of abrasive in a short period of time.

TROUBLE SHOOTING

MALFUCTION	CAUSE	SUGGESTED REMEDY
ELEVATOR BELT BREAKAGE	1. Belt tension is too tight, break could occur at the splice.	1. Check belt for proper alignment and tension. Belt should be tight but care should be taken not to add too much stress on the splice.
	2. Foreign objects in boot could cause jamming.	2. Sudden jams should be avoided. Keep elevator boot clear of working parts or tramp metal.
	3. Worn belt.	3. A badly worn belt may suddenly fail. Inspect belt and splice and replace when necessary.
ELEVATOR BELT SLIPPAGE	1. Loose belt.	1. Check belt alignment and tension. Tighten if necessary.
	2. Worn sheaves or pulleys.	2. Inspect and replace sheaves when worn.
ELEVATOR MOTOR MALFUNCTION	1. Elevator is overloaded by too great an abrasive load causing motor to overload.	1. Make abrasive additions slowly. Be sure elevator is running before adding abrasive or starting blast operation. Do not load equipment above rated capacity.
	2. Belt hits against or rubs the elevator casing causing motor overload.	2. Check belt alignment. Belt should be centered on sheave.
	3. Tramp metal in boot section. Belt jams causing motor overload.	3. Clean out boot section and screens.
	4. Belt tension too tight causing motor overload.	4. Loosen belt and realign.
	5. Bearing failure.	5. Check motor bearings for wear. Lubricate when needed.

TROUBLE SHOOTING

MALFUCTION	CAUSE	SUGGESTED REMEDY
	ELECTRICAL SYSTEM	
FUSES BLOW OUT	1. Could be loose in fuse holder, slightly undersize or overloaded.	1. Check fuse connections. Check for grounded circuit, bare wire or poorly taped joints.
PUSH BUTTON STUCK	1. Abrasive dust or dirt. Broken spring.	1. Remove button cover and blow out. Check contacts for dirt, broken or out of place springs, or improper alignment.
AMMETER MALFUNCTION	1. Dirty or bent pointer. Ammeter is burned out.	1. If careful, ammeter may be brushed out with a fine brush. Reseal case tightly. Carefully adjust points if necessary. If pointer is bent or meter is burned out meter will have to be replaced.

TROUBLE SHOOTING

MALFUCTION	CAUSE	SUGGESTED REMEDY
		DUST COLLECTION SYSTEM
DUST CARTRIDGE FAILURE	1. Binding	1. If excessive dust or dirt becomes trapped in the cartridge fibers and the air pulse system is unable to dislodge it, cartridge should be removed and cleaned carefully.
	2. Caking – a formation of "mud" on the dirty side of the bags. The "mud" later dries into a hard cake that is difficult to remove.	2. (a) Check outside vents and piping for moisture. If moisture is present place a protective covering over vent during idle periods. If system is mounted outside allow to pulse for several extra minutes to assure that as much dust as possible has been removed from the filter cartridge. (b) Caking could also be caused if a pulse valve has failed and air is not being pulsed through a row of cartridge. Locate faulty valve(s), replace or repair.
	3. Aging.	3. Dust cartridges have an average life of 18 to 36 months. Inspect and replace cartridges and cages when worn.
POOR VENTILATION	1. Refuse hoppers full.	1. A daily schedule of inspection should be set up to empty the dust collector refuse hoppers.
	2. Faulty valve.	2. Locate and replace or repair.
	3. Hole in dust cartridge	3. A hole in the dust cartridge could be caused by trapped metal or debris entering the cartridge. This allows dust to escape into the atmosphere or back into the blast chamber reducing cleaning efficiency. Inspect cartridge regularly and replace when necessary.
	4. Improper separator adjustment.	4. Check separator adjustment to be sure sufficient dust and contaminants are being drawn out of the cycling abrasive. Check refuse gate and air baffle adjustment.

TROUBLE SHOOTING

MALFUCTION	CAUSE	SUGGESTED REMEDY
	HYDRAULIC SYSTEM	
NO PRESSURE	1. Improper rotation.	1. Reverse rotation.
	2. Insufficient oil	2. Top up to level.
	3. Relief setting too low.	3. Re-set.
	4. Suction blocked.	4. Check and clean suction strainer.
	5. Pump faulty.	5. Repair or replace.
	6. Drive sheared.	6. Check and repair.
	7. Pipe failure.	7. Check pressure pipes for leaks and repair if necessary.
	8. Flow control valve set too low.	8. Check and re-set.
INADEQUATE FLOW	1. Blocked suction.	1. Check and clean strainer.
	2. Pressure leakage.	2. Check pressure pipes and repair or replace.
	3. Faulty pump.	3. Repair or replace
	AIR BLAST ONLY	
INCREASED CLEANING TIME	1. Clogged hose lines and/or buildup in the lower abrasive recycle system.	1. Remove buildup and unclog hose lines.
	2. Worn nozzles.	2. Replace nozzles.
	3. A decrease in vacuum efficiency caused by the dust collector.	3. Review section three and inspect the dust collector and repair if necessary.

TROUBLE SHOOTING

MALFUCTION	CAUSE	SUGGESTED REMEDY
	CRD MECHANIC SYSTEM	
PARTS CAUGHT BETWEEN BELT AND DRUM	1. Belt loose.	1. Review section six – tightening belt
	2. Parts caught between belt and drum.	2. Inspect drum and belt for loose parts. If parts are caught between belt and drum, remove parts and tighten belt (see section six).
EXTREME HYDRAULIC PRESSURE		EXCESSIVE OF 850psi FOR ALUMINUM PARTS OR 1000psi FOR CAST IRON AND STEEL PARTS
PARTS NOT EXITING DRUM ONTO VIBRATORY CONVEYOR	1. CRD tilt position is zero.	1. Increase tilt position above zero.
	2. Parts too big.	2. Use smaller parts. Contact Goff for possible larger machine.
	3. Fast feed rate of parts into drum.	3. Lower the feed rate of parts into drum.
	4. Drum is not oscillating properly.	4. (a) Review section six and make sure everything is in its proper position. (b) Check the hydraulic system. Make sure all hoses, valves, and fittings are not leaking. Make sure the torque hub, torque drive, and hydraulic pump are functioning properly and replace any components if needed. (c) Make sure the C3 coupling and bearing on the drive shaft are functioning properly and replace if needed. Make sure the C3 coupling is correctly aligned.
	WM MECHANIC SYSTEM	
BELT MALFUNCTIONING	1. Belt off track.	1. Review section three – belt installation and adjustment.
	2. Belt stretching.	2. Review section three – belt installation and adjustment.
	3. Belt breaking.	3. Repair and replace if necessary.
	4. Belt curling.	4. Review section three – belt installation and adjustment.